Bringing
power to life.

THE RCD HANDBOOK

BEAMA GUIDE TO THE SELECTION AND APPLICATION OF RESIDUAL CURRENT DEVICES (RCDs)

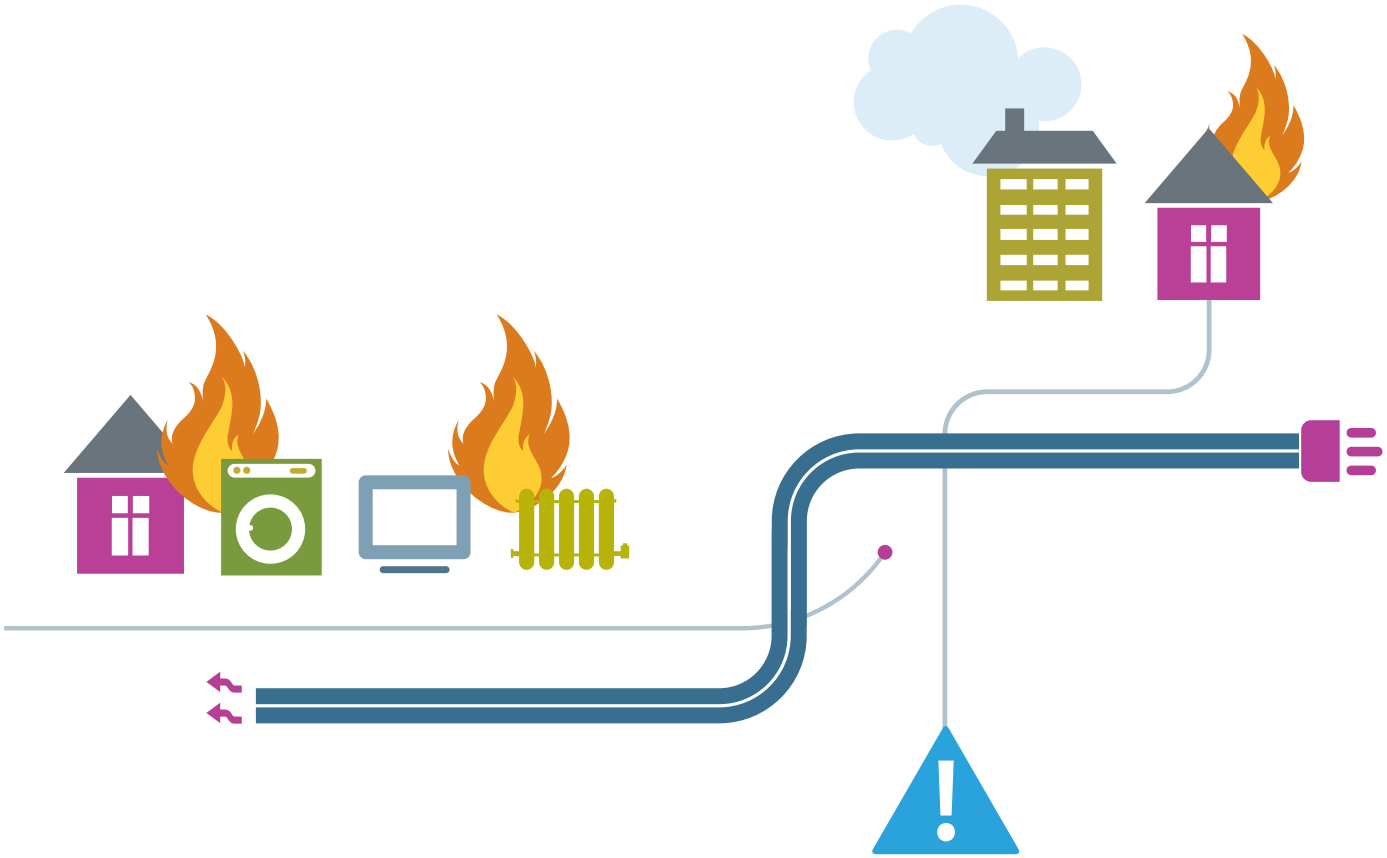

March 2022

COMPANIES INVOLVED IN THE PREPARATION OF THIS GUIDE

ABB Ltd
Tower Court; Courtaulds Way
Foleshill Enterprise Park
Coventry, West Midland,s CV6 5NX
Tel: +44 (0) 2476 368 500
https://new.abb.com/uk

Eaton Electric Limited
252 Bath Road, Slough,
Berkshire SL1 4DX
Tel: +44 (0) 8700 545 333
Email: ukcommorders@eaton.com
www.eaton.com/uk

GreenBrook Electrical
62 West Road, Harlow,
Esssex CM20 2BG
Tel + 44 (0) 1279 772772
www.greenbrook.co.uk

Hager Ltd
Hortonwood 50, Telford,
Shropshire TF1 7FT
Tel: +44 (0)1952 675 689
Email: Technical@hager.co.uk
www.hager.co.uk

Legrand Electric Ltd
Great King Street North,
Birmingham B19 2LF
Tel: +44 (0) 370 608 9020
Email: powersales.uk@legrand.co.uk
www.legrand.co.uk

Schneider Electric Ltd
Stafford Park 5, Telford, Shropshire TF3 3BL
Tel: +44 (0) 1952 290029
Fax: +44 (0) 1952 292238
www.schneider-electric.co.uk

Electrium Sales Ltd (a Siemens Company)
Walkmill Lane, Bridgetown
Cannock, WS11 0XE
Tel: +44 (0) 1543 455000
Email: info@electrium.co.uk
www.electrium.co.uk

Timeguard Ltd
Victory Park, 400 Edgware Road
London NW2 6ND
Tel: +44 (0) 20 8450 0515
Fax: +44 (0) 20 8450 0635
Email: helpline@timeguard.com
www.timeguard.com

Western Automation R&D
2 Atreus Place, Poolboy, Ballinalsoe,
Co. Galway, Ireland H53 TD 78
Tel: +353 (0) 90 9643359
Fax: +353 (0) 90 9643094
Email: info@westernautomation.com
www.westernautomation.com

ABOUT BEAMA

BEAMA is the long established and respected trade association for the electrotechnical sector. The association has a strong track record in the development and implementation of standards to promote safety and product performance for the benefit of manufacturers and their customers.

This Guide provides specifiers, installers and end users, clear guidance on the selection and application of the wide range of RCDs now available.

This Guide has been produced by BEAMA's Building Electrical Systems Sector operating under the guidance and authority of BEAMA, supported by specialist central services for guidance on European Single Market, Quality Assurance, Legal and Health & Safety matters. BEAMA's Building Electrical Systems Portfolio comprises of major UK manufacturing companies.

Details of other BEAMA Guides can be found on the BEAMA website www.beama.org.uk

DISCLAIMER
This publication is subject to the copyright of BEAMA Ltd. While the information herein has been compiled in good faith, no warranty is given or should be implied for its use and BEAMA hereby disclaims any liability that may arise from its use to the fullest extent permitted under applicable law.

© BEAMA Ltd 2022
Copyright and all other intellectual property rights in this document are the property of BEAMA Ltd. Any party wishing to copy, reproduce or transmit this document or the information contained within it in any form, whether paper, electronic or otherwise should contact BEAMA Ltd to seek permission to do so.

Acknowledgements
BEAMA would like to thank IEC, BSI and IET for allowing references to their standards; Health and Safety Executive (HSE) for reference to their documents.

CONTENTS

1. INTRODUCTION 5
   - 1.1 FOR THE NON-SPECIALIST 5
   - 1.2 PRINCIPLES OF RCD OPERATION 6
   - 1.3 RESIDUAL CURRENT DEVICES (RCDs) 7

2. EFFECTS OF ELECTRICITY 8
   - 2.1 RISK OF ELECTROCUTION 8
   - 2.2 TYPES OF ELECTROCUTION RISK 8
   - 2.3 EFFECTS OF ELECTRIC SHOCK ON THE HUMAN BODY 8

3. ELECTRIC SHOCK PROTECTION 11
   - 3.1 PRINCIPLES OF SHOCK PROTECTION 11
   - 3.2 EARTHING SYSTEMS 12
   - 3.3 PROTECTION AGAINST DIRECT AND INDIRECT CONTACT 13
   - 3.4 RCDs AND INDIRECT CONTACT SHOCK PROTECTION 14
   - 3.5 RCDs AND DIRECT CONTACT SHOCK PROTECTION 15
   - 3.6 RCDs IN REDUCED AND EXTRA-LOW VOLTAGE APPLICATIONS 15
   - 3.7 RCDs IN ELECTRIC VEHICLE CHARGING 15

4. FIRE PROTECTION 16
   - 4.1 BACKGROUND 16
   - 4.2 PROTECTIVE MEASURES AS A FUNCTION OF EXTERNAL INFLUENCES 16

5. INSTALLATION RISKS 17
   - 5.1 BACKGROUND 17
   - 5.2 TYPICAL RISKS 17

6. RCD SELECTION 18
   - 6.1 RCD SELECTION CRITERIA 18
   - 6.2 RCD SELECTION GUIDES 23

7. OPERATION AND MAINTENANCE 25
   - 7.1 TESTING BY THE END USER 25
   - 7.2 TESTING BY THE INSTALLER 25
   - 7.3 TROUBLESHOOTING 26
   - 7.4 DETAILED FAULT-FINDING IN RCD PROTECTED INSTALLATIONS 26

8. RCD CONSTRUCTION 28
   - 8.1 VOLTAGE INDEPENDENT RCD 28
   - 8.2 VOLTAGE DEPENDENT RCD 28

9. DETAILED FAULT-FINDING ON RCD PROTECTED INSTALLATIONS 29
   - 9.1 MAINS BORNE TRANSIENTS AND SURGES 29
   - 9.2 CAPACITANCE TO EARTH 31
   - 9.3 CABLES AND OVERHEAD LINES 32
   - 9.4 NEUTRAL TO EARTH FAULTS 33
   - 9.5 DOUBLE GROUNDING 33
   - 9.6 CONCLUSIONS 33

10. ANNEX 34
   - 10.1 FIRE PROTECTION – EXTRACT FROM DTI REPORT 34
   - 10.2 REFERENCES 40
   - 10.3 TERMS AND DEFINITIONS 41

1 INTRODUCTION

The use of electricity is so much a part of everyday life that it is often taken for granted and the risks associated with its use at home and at work are underestimated or misunderstood.

Residual Current Devices (RCDs) are electrical devices which afford a very high degree of protection against the risks of electrocution and fire caused by earth faults. However, they are not a solution for all installation problems; it is therefore important to understand what they can and cannot do. Furthermore, the different types of RCDs available on the market can be confusing.

This publication has been produced by BEAMA Members for use by specifiers, installers and end users, to give clear guidance on the selection and application of the wide range of RCDs now available. Guidance is also given on the installation and maintenance of RCDs, including many of the installation conditions that cause 'unwanted tripping'.

Most chapters begin with a section that is designed for the non-specialist or end user.

When read in conjunction with BS 7671 Requirements for Electrical Installations (The IET Wiring Regulations), the guidance in this publication will contribute to safe and reliable installations.

There can be no doubt that RCDs give protection against electrocution and can reduce the risk of fire arising from insulation failure in the electrical installation. This level of protection can never be equalled by circuit-breakers or fuses alone.

1.1 FOR THE NON-SPECIALIST

Readers who are familiar with the role and operation of RCDs can skip this section and move on to section 1.2.

"What is an RCD?"

An RCD is a device that is designed to provide protection against electrocution or electrical fires by cutting off the flow of electricity automatically when it senses a 'leakage' of electric current from a circuit.

To appreciate the importance of an RCD it is helpful to understand how much electrical energy it takes to kill a human being. The smallest fuse used in a normal electric plug is 3 Amps; it takes less than one twentieth of that current to kill an adult in less than one tenth of a second.

RCD Operation

The operation of an RCD can be understood by taking an analogy from the water flowing in a central heating system.

A leak may occur when the pipework is damaged or punctured. In the same way a 'leak' of electricity can occur when the cable insulation in a circuit is faulty or damaged.

In a central heating system, the 'flow' pipe takes the water from the boiler to the radiators; if the installation is sound the same amount of water will return to the boiler as in Figure 1. However, if there is a leak, there will be less water in the return pipe than in the flow pipe. If the system had flow detectors in the flow and return pipes, these could be coupled to a valve so that the valve closed when the rate of flow in the return pipe was less than that in the flow pipe as in Figure 2.

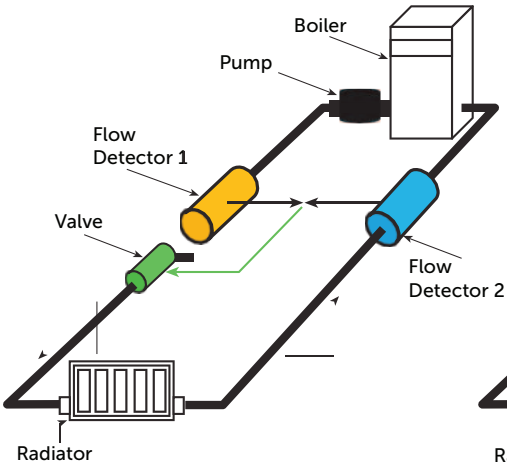

FIGURE 1 – HEALTHY CENTRAL HEATING CIRCUIT. THE SAME AMOUNT OF WATER FLOWS IN THE 'FLOW' AND 'RETURN' PIPES

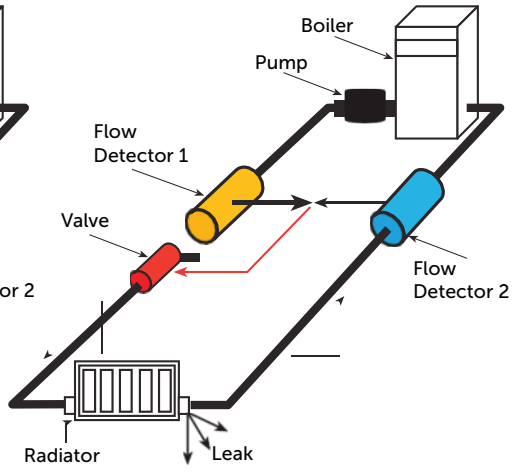

FIGURE 2 – IF THERE IS A LEAK, THERE WILL BE LESS WATER IN THE 'RETURN' PIPE THAN IN THE 'FLOW' PIPE. THIS COULD BE USED TO TRIP A VALVE.

The rate of flow of water can be compared with the current in an electrical circuit and the water pressure can be compared with the voltage. When the line and neutral currents are equal, the RCD will not trip but when it senses that the neutral current is less than the line current it will trip.

In both cases the leakage is detected without measuring the leak itself. It is the flow and return rates that are measured and compared. An RCD compares the line and neutral currents and switches off the electricity supply when they are no longer equal.

With an RCD, the line (brown) and neutral (blue) conductors pass through the core of a sensitive current transformer, see Figure 3, the output of which is electrically connected to a tripping system. In a healthy installation, the current flows through the line conductor and returns through the neutral conductor and since these are equal and opposite the core remains balanced. However, when a leakage of electric current occurs, as in Figure 4, the line and neutral currents are no longer equal; this results in an output from the transformer which is used to trip the RCD and disconnect the supply.

1.2 PRINCIPLES OF RCD OPERATION

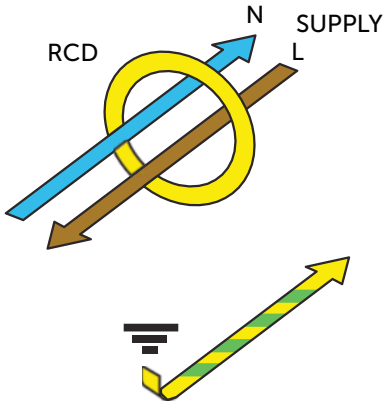

FIGURE 3 – IN AN RCD, THE LINE AND NEUTRAL CONDUCTORS OF A CIRCUIT PASS THROUGH A SENSITIVE CURRENT TRANSFORMER. IF THE LINE AND NEUTRAL CURRENTS ARE EQUAL AND OPPOSITE, THE CORE REMAINS BALANCED

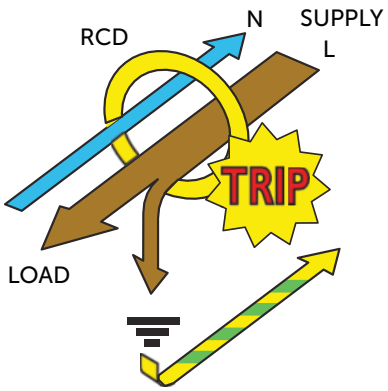

FIGURE 4 – IF THERE IS AN EARTH FAULT THE NEUTRAL CURRENT WILL BE LOWER THAN THE LINE CURRENT. THIS IMBALANCE PRODUCES AN OUTPUT FROM THE CURRENT TRANSFORMER WHICH IS USED TO TRIP THE RCD AND SO BREAK THE CIRCUIT

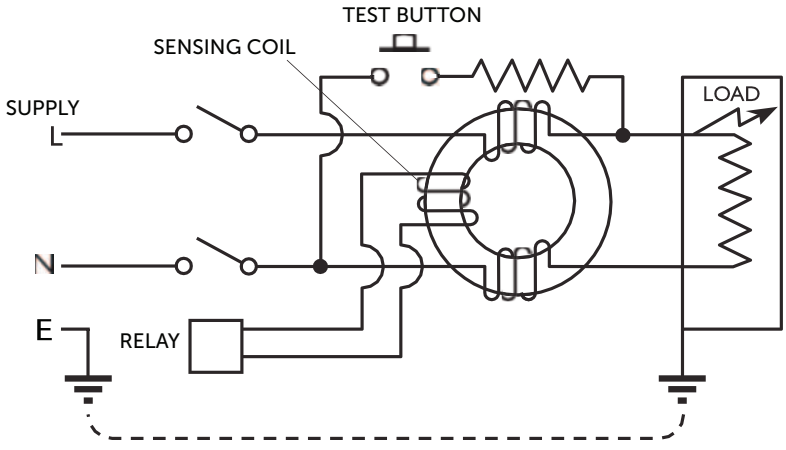

FIGURE 5 – SCHEMATIC OF AN RCD

The basic principle of operation of the RCD is shown in Figure 5. When the load is connected to the supply through the RCD, the line and neutral conductors are connected through primary windings on a toroidal transformer. In this arrangement, the secondary winding is used as a sensing coil and is electrically connected to a sensitive relay or solid state switching device, the operation of which triggers the tripping mechanism. When the line and neutral currents are balanced, as in a healthy circuit, they produce equal and opposite magnetic fluxes in the transformer core with the result that there is no current generated in the sensing coil. (For this reason the transformer is also known as a 'core balance transformer').

When the line and neutral currents are not balanced, they create an out-of-balance flux. This will induce a current in the secondary winding which is used to operate the tripping mechanism.

It is important to note that both the line and neutral conductors pass through the toroid.

RCDs work equally well on single phase, three phase or three phase and neutral circuits, but when the neutral is distributed it is essential that it passes through the toroid.

Test Circuit

A test circuit is always incorporated in the RCD. Typically, the operation of the test button connects a resistive load between the line conductor on the load-side of the RCD and the supply neutral.

The test circuit is designed to pass a current in excess of the tripping current of the RCD to simulate an out-of-balance condition. Operation of the test button verifies that the RCD is operational. It is important to note, therefore, that the test circuit does not check the circuit protective conductor or the condition of the earth electrode.

All RCDs should be checked at regular intervals to confirm that the RCD trips. As a minimum, a check every six months is recommended.

1.3 RESIDUAL CURRENT DEVICES (RCDs)

RCCB BS EN (IEC) 61008 (Residual Current Operated Circuit- Breaker without Integral Overcurrent protection)

A mechanical switching device designed to make, carry and break currents under normal service conditions and to cause the opening of the contacts when the residual current attains a given value under specified conditions. It is not designed to give protection against overloads and/or short-circuits and must always be used in conjunction with an overcurrent protective device such as a fuse or circuit-breaker.

RCBO BS EN (IEC) 61009 (Residual Current Operated Circuit- Breaker with Integral Overcurrent protection)

A mechanical switching device designed to make, carry and break currents under normal service conditions and to cause the opening of the contacts when the residual current attains a given value under specified conditions. In addition it is designed to give protection against overloads and/or short-circuits and can be used independently of any other overcurrent protective device within its rated short-circuit capacity.

SRCD BS 7288 (Socket-Outlet incorporating a Residual Current Device)

A socket-outlet for fixed installations incorporating an integral sensing circuit that will automatically cause the switching contacts in the main circuit to open at a predetermined value of residual current.

FCURCD BS 7288 (Fused Connection Unit incorporating a Residual Current Device)

A fused connection unit for fixed installations incorporating an integral sensing circuit that will automatically cause the switching contacts in the main circuit to open at a predetermined value of residual current.

PRCD BS 7071 (Portable Residual Current Device)

A device comprising a plug, a residual current device and one or more socket-outlets (or a provision for connection). It may incorporate overcurrent protection.

CBR BS EN (IEC) 60947-2 (Circuit-Breaker incorporating Residual Current Protection)

A circuit-breaker providing overcurrent protection and incorporating residual current protection either integrally (an integral CBR) or by combination with a residual current unit which may be factory or field fitted.

Note:The RCBO and CBR have the same application, both providing overcurrent and residual current protection. In general, an RCBO is intended to be used by ordinary (unskilled) persons and a CBR is intended to be used by skilled persons. RCBOs and CBRs are more strictly defined by their relevant product standards.

IC-CPD BS EN (IEC) 62752 (In-Cable Control and Protective Device for mode 2 charging of electric road vehicles)

An RCD (≤ 30 mA) and control device integrated into a mode 2 charging cable for electric vehicle charging.

MRCD BS EN (IEC) 60947-2 (Modular Residual Current Device)

A device or an association of devices comprising a current sensing means and a processing device designed to detect and to evaluate the residual current and to control the opening of the contacts of a current breaking device.

MRCDs are primarily intended to be used in conjunction with circuit-breakers to BS EN (IEC) 60947-2 however, they may also be declared suitable for use in conjunction with other current breaking devices. All arrangements must be verified by the MRCD manufacturer, for conformity to the applicable clauses of BS EN (IEC) 60947-2.

When an MRCD is used in conjunction with a Moulded Case Circuit Breaker (MCCB) or Instantaneous trip Circuit Breaker (ICB), either a shunt trip or under voltage release (UVR) may be used.

Additional types of devices:

RCM BS EN (IEC) 62020 (Residual Current Monitor)

A device designed to monitor electrical installations or circuits for the presence of unbalanced earth fault currents. It does not incorporate any tripping device or overcurrent protection. RCMs are not intended to provide protection against electric shock, BS 7671:2018+A2:2022 regulation 538.4.1 and BS EN IEC 62020-1 refer.

RDC-DD BS IEC 62955 (Residual Direct Current Detecting Device)

A device to be used for Mode 3 charging of Electric Vehicles. RDC-DDs are intended to remove or initiate removal of the supply to electric vehicles in cases where a smooth residual direct current equal to or above 6 mA is detected. The value of 6 mA for smooth residual direct current was chosen to prevent impairing the correct operation of an upstream RCD Type A.

There are different types of RDC-DD. These are addressed in a separate BEAMA publication. See BEAMA Guide on Residual Current Device (RCD) Protection of Electric Vehicle (EV) charging installations.

1.4 EVOLUTION OF RCD STANDARDS

The early British Standard for RCDs was BS 4293 – Specification for residual current-operated circuit-breakers. BS 4293 was replaced around 1995 by BS EN 61008 (RCCBs) and BS EN 61009 (RCBOs).

There are many products still in the market which conform to BS 4293, these can be identified by the marking of BS 4293 on the product.

BS 4293 was used for RCCBs and, in conjunction with BS 3871 (circuit breakers), for combined MCB/RCD devices which in BS EN 61009 are referred to as RCBOs.

BS 4293 stipulated requirements for residual currents of a sinusoidal waveform (ac) only.

NOTE: *An RCCB or an RCBO may be combined with an Arc Fault Detection Device (AFDD) according to BS EN 62606.*

2 EFFECTS OF ELECTRICITY

2.1 RISK OF ELECTROCUTION

It only requires a very small continuous electric current – 40 mA (a twenty-fifth of an amp) or more – flowing through the human body to cause irreversible damage to the normal cardiac cycle ('ventricular fibrillation') or death ('electrocution'). When somebody comes into direct contact with mains voltage and earth, the current flowing through the body, is of the order of 230 mA (just under a quarter of an amp).

Appropriate protection against serious injury or death calls for disconnection in a fraction of a second (40 ms or one twenty-fifth of a second) at 230 mA. For lower values of shock current, longer disconnection times may be acceptable but if disconnection takes place within 40ms fibrillation is unlikely to occur.

'High sensitivity' RCDs, rated 30 mA or even 10 mA, are designed to disconnect the supply within 40 ms at 150 mA and within 300ms at rated tripping current to protect the user. 'Medium sensitivity' devices, rated 100 mA or more will provide protection against fire risks but will not provide full personal protection.

A fuse or circuit-breaker alone will not provide protection against these effects.

The actual nature, and effect of an electric shock, will depend on many factors – the age and sex of the victim, which parts of the body are in contact, whether there are other resistive elements in the 'circuit', for example clothing or footwear, if either of the contact points is damp or immersed in water etc.

It should be borne in mind that even with a 10 mA or 30 mA RCD fitted, a person coming into contact with mains voltage will suffer an electric shock. The effects of such a shock will depend on the specific circumstances, such as those identified above.

2.2 TYPES OF ELECTROCUTION RISK

There are basically two different types of electrocution risk.

The first type of electrocution risk occurs if insulation, such as the non-metallic covering around cables and leads, is accidentally damaged, exposing live conductors. If a person comes into contact with the 'live' and 'earth' conductors there is a more serious risk because the current flowing to earth will be insufficient to operate the fuse or circuit-breaker. This is because the human body is a poor conductor of electricity. Consequently, fuses or circuit-breakers provide NO PROTECTION at all against contact with live conductors.

If an RCD was installed, in this situation the current leaking to earth through the body would cause an imbalance as described in Section 1.2 and the RCD would trip. Whilst not preventing an electric shock, the speed of operation of the RCD will minimise the risk of electrocution.

The second risk occurs when the metal enclosure of electrical equipment or any metal fixture such as a sink or plumbing system accidentally comes into contact with a live conductor, causing the metalwork to become live. In the UK a fuse or a circuit-breaker normally provides protection against this risk because all exposed metalwork is connected to earth. In a correctly designed installation, the current flowing to earth will be sufficient to blow the fuse or trip the circuit-breaker.

2.3 EFFECTS OF ELECTRIC SHOCK ON THE HUMAN BODY

Residual current devices with a tripping current of 30 mA or less are now widely used in all types of electrical installation and provide valuable additional protection against the risk of electrocution. To appreciate fully the correct application of these important safety devices it is necessary to have some understanding of the physiological effects of electric shock on the human body.

The term 'electric shock' is defined in BS 7671 as 'A dangerous physiological effect resulting from the passing of an electric current through a human body or livestock.' The amount of current flowing will determine the severity of the shock. Although the definition includes the effects on livestock, this is a rather special area and for the purposes of this section only the effects on the human body will be considered.

The amount of current flowing through the body under normal 50 Hz conditions will, in practice, depend on the impedance (the effective resistance of the body to the passage of electric current) of that person, including clothing/gloves/footwear etc., and on the shock voltage. The majority of accidents involve simultaneous direct contact with live parts and earthed metal, so it can be assumed that the shock voltage will be at full mains voltage. The value of body impedance is much more difficult to assess because it can vary enormously according to the circumstances, the characteristics of the individual concerned and also the current path through the body. In most situations, the current path will be from hand to hand whilst very occasionally it may be from hand to foot or some other part of the body. This is less common due to the wearing of shoes, socks and other clothing.

In order to understand the wide variations in body impedances that can occur, the human body can be viewed as a flexible container filled with electrolyte, where the internal impedance is reasonably constant at approximately 1000 ohms. The wider variations come from the relatively high resistance at the two contact points on the outside of the container (skin resistance). These, external impedances, can be as high as several thousand ohms depending on the state of the skin (wet or dry), contact area and contact pressure. Initial current flow can be quite low but will start to increase rapidly as even small currents will quickly burn through the surface of the skin resulting in a significant drop in the external impedance. In the worst case scenario, a person receiving a shock at 230 V 50 Hz will experience a maximum current flow of 230 mA through the central body area. This will have dangerous physiological results, including electrocution.

The effects of electric current passing through the human body become progressively more severe as the current increases. Although individuals vary significantly the following list is a good general guide for alternating currents.

Effects of different values of electric current flowing through the human body (at 50 Hz)

0 – 0.5 mA
This current is below the level of perception, usually resulting in no reaction.

0.5 mA – 5 mA
Although there are no dangerous physiological effects, a current of this order may startle a person sufficiently to result in secondary injury due to falling, dropping items etc.

5 mA – 10 mA
This produces the same effect as above but, in addition, muscular reaction may cause inability to let go of equipment. In general, the female body is more susceptible to this condition than the male. Once current flow ceases, the victim can let go.

10 mA – 40 mA
Severe pain and shock are experienced as current increases. At currents over 20 mA the victim may experience breathing difficulties with asphyxia if current flow is uninterrupted. Reversible disturbance to heart rhythm and even cardiac arrest are possible at higher values of current and time.

40 mA – 250 mA
Severe shock and possibility of non-reversible disturbances to the normal cardiac cycle, referred to as "ventricular fibrillation", occur at this level. The possibility of fibrillation increases as current and time increase. It is also possible to experience heavy burns or cardiac arrest at higher currents.

It can be seen from the above descriptions that the effect of current passing through the human body is very variable but it is generally accepted that electrocution at normal mains voltage is usually the result of ventricular fibrillation. This condition is triggered by the passage of electric current through the region of the heart and is normally irreversible, unless expert medical attention is obtained almost immediately. The onset of fibrillation is dependent on the magnitude and duration of the current and the point in the normal cardiac cycle at which the shock occurs. For those wishing to study the subject in greater detail this relationship is documented in the IEC TS 60479 series (Effects of current on human beings and livestock).

Figure 6, which is based on IEC 60479, shows the conventional zones of alternating currents (15-100 Hz); the current path from the left hand to feet depending on the contact time and the corresponding maximum break times of RCDs with a sensitivity of 30 mA. This illustrates why 30 mA RCDs are designed to operate within these parameters and are recognized as providing additional protection. It should be noted that whilst RCDs provide additional protection, RCDs will not prevent an electric shock.

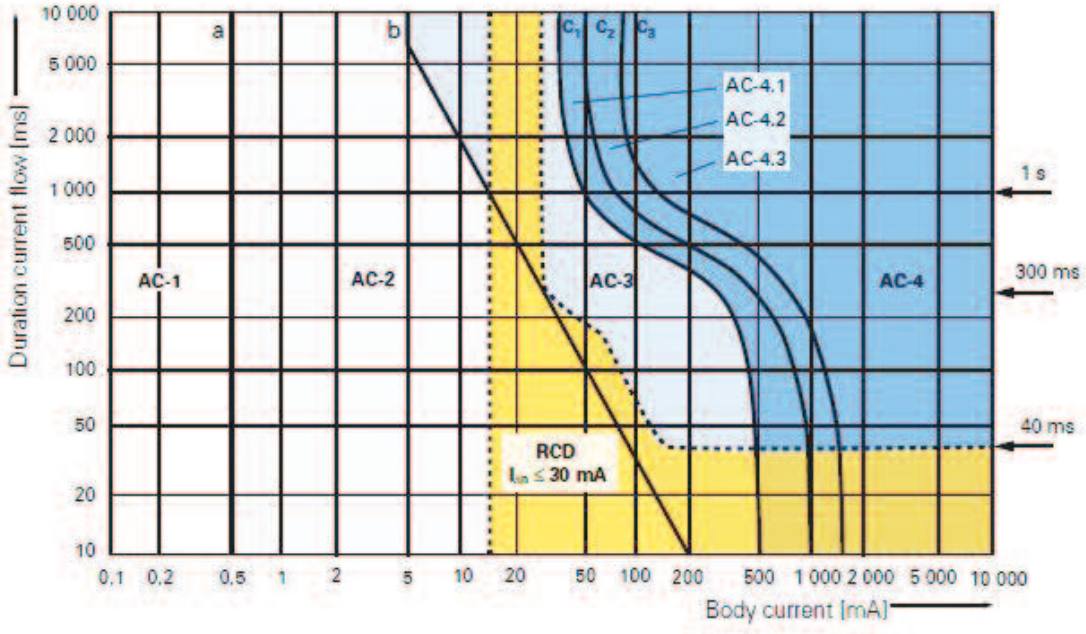

Zone	Boundaries	Physiological effects
AC-1	Up to curve a	Usually no reaction
AC-2	Curve a up to curve b	Usually no physiological effects
AC-3	Curve b up to curve c_1	Usually no organic damage to be expected. Likelihood of muscular contractions and difficulty in breathing, reversible disturbances of formation and conduction of impulses in the heart, including atrial fibrillation and transient cardiac arrest without ventricular fibrillation increasing with magnitude and time.
AC-4	Above curve c_1 $c_1 - c_2$ $c_2 - c_3$ Beyond curve c_3	Increasing with magnitude and time, dangerous pathophysiological effects such as cardiac arrest, breathing arrest and severe burns may occur in addition to the effects of Zone AC-3: Probability of ventricular fibrillation increasing up to about 5 %. Probability of ventricular fibrillation increasing up to about 50 % Probability of ventricular fibrillation above 50 %.

FIGURE 6 – TIME/CURRENT OF ALTERNATING CURRENT EFFECTS (15 - 100 HZ) ON PERSONS FOR CURRENT PATH CORRESPONDING TO THE PASSAGE FROM LEFT ARM INTO FEET AND COMPARISON WITH LIMITS OF TRIPPING TIMES OF RESIDUAL CURRENT DEVICE $I_{\Delta n}$ = 30 mA

The details so far have been greatly simplified by assuming that normal environmental conditions apply and that the source of the electric shock is an alternating current supply at 50 Hz. Under special conditions, for example when a body is immersed in water or in close contact with earthed metal, the body impedance will generally be at its lowest, with consequently high shock currents.

Frequencies of 15-100 Hz are considered to present the most serious risk. At other frequencies, including direct current, the threshold of fibrillation occurs at a different current level. All these factors must be considered when making a choice of RCD for special applications. Under these circumstances, the potential user is strongly recommended to consult the manufacturer for appropriate advice.

3 ELECTRIC SHOCK PROTECTION

3.1 PRINCIPLES OF SHOCK PROTECTION

Protection of persons and livestock against electric shock is a fundamental principle in the design of electrical installations in accordance with BS 7671: *Requirements for Electrical Installations*, commonly known as *The IET Wiring Regulations.* Use of the correct earthing system is an essential part of this process.

Electric shock may arise from direct contact with live parts, for example when a person touches a live conductor that has become exposed as a result of damage to the insulation of an electric cable. Alternatively, it may arise from indirect contact if, for example, a fault results in the exposed metalwork of an electrical appliance, or even other metalwork such as a sink or plumbing system becoming live. In either case there is a risk of an electric current flowing to earth through the body of any person who touches the live conductor or live metalwork. (See Figure 7). (The terms 'direct contact' and 'indirect contact' have now been replaced in BS 7671 – see section 3.3 of this document.)

Fuses and circuit-breakers provide the first line of defence against indirect contact electric shock. If the installation is correctly earthed (i.e. all the exposed metalwork is connected together and to the main earth terminal of the installation) then an indirect contact fault will cause a very high current to flow to earth through the exposed metalwork. This will be sufficient to 'blow' the fuse or trip the circuit-breaker, disconnecting that part of the installation within the time specified in BS 7671 and so protecting the user.

Fuses and circuit-breakers cannot provide protection against the very small electric currents flowing to earth through the body as a result of direct contact. RCDs, provided they have been selected correctly, can afford this protection as described in the previous chapter. They also provide protection against indirect contact under certain installation conditions where fuses and circuit-breakers cannot achieve the desired effect, for example where the earthing systems described above are ineffective.

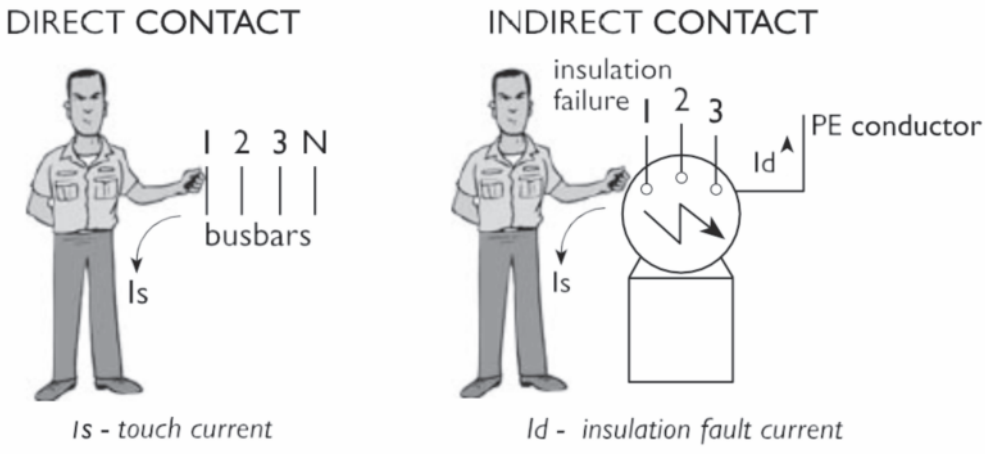

FIGURE 7 –DIRECT AND INDIRECT CONTACT ELECTRIC SHOCK

3.2 EARTHING SYSTEMS

For a full understanding of electric shock protection it is necessary to consider the different types of earthing system in use. BS 7671 lists five types as described below:

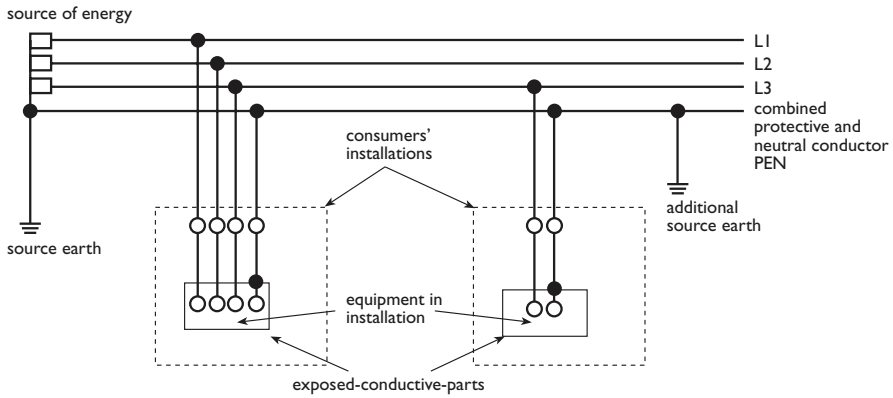

FIGURE 8 –TN-C SYSTEM

In this arrangement a single protective earth and neutral (PEN) conductor is used for both the neutral and protective functions, all exposed-conductive-parts being connected to the PEN conductor. It should be noted that in this system an RCD is not permitted since the earth and neutral currents cannot be separated.

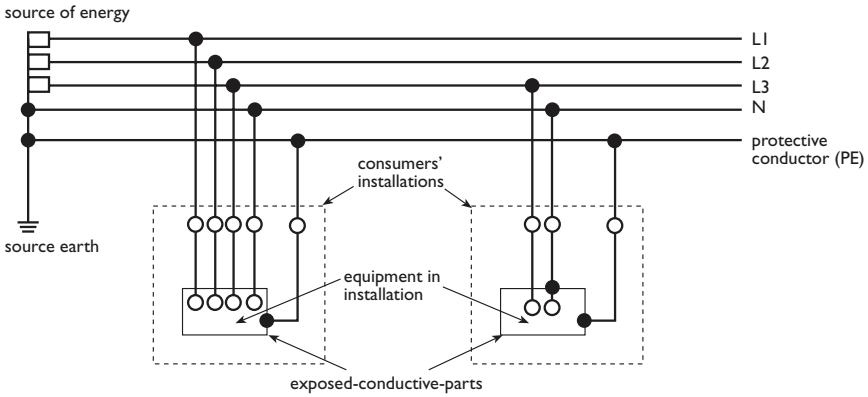

FIGURE 9 –TN-S SYSTEM

With this system the conductors for neutral and protective earth (PE) circuits are separate and all exposed-conductive-parts are connected to the PE conductor.This system is the one most commonly used in the UK, although greater use is being made of the TN-C-S arrangement due to the difficulties of obtaining a good substation earth.

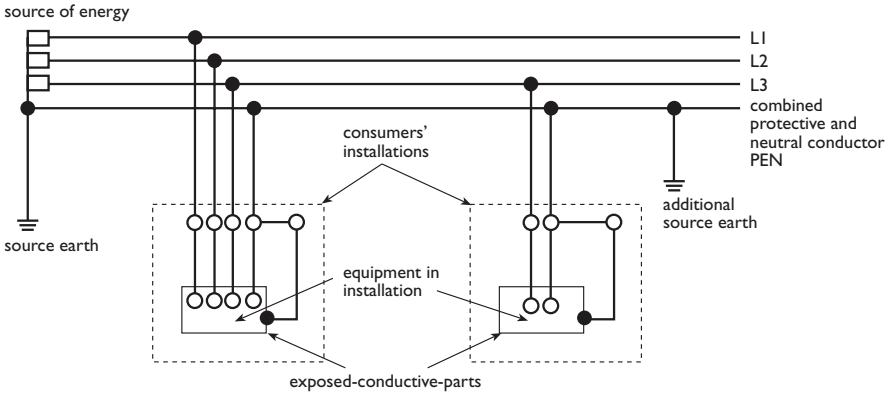

FIGURE 10 –TN-C-S SYSTEM

The usual form of a TN-C-S system is where the supply is TN-C and the arrangement of the conductors in the installation is TN-S.This system is often described as a protective multiple earthing (PME) system. This is incorrect since PME is a method of earthing.

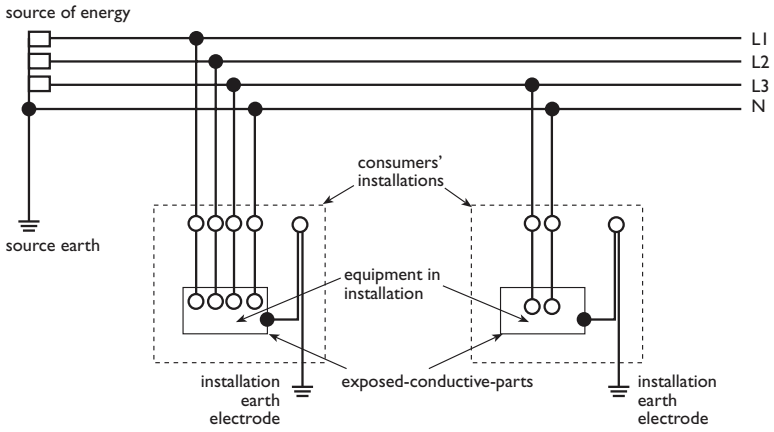

In a TT system the electricity supply provider and the consumer must both provide earth electrodes at appropriate locations, the two being electrically separate. All exposed-conductive-parts of the installation are connected to the consumer's earth electrode.

FIGURE 11 –TT SYSTEM

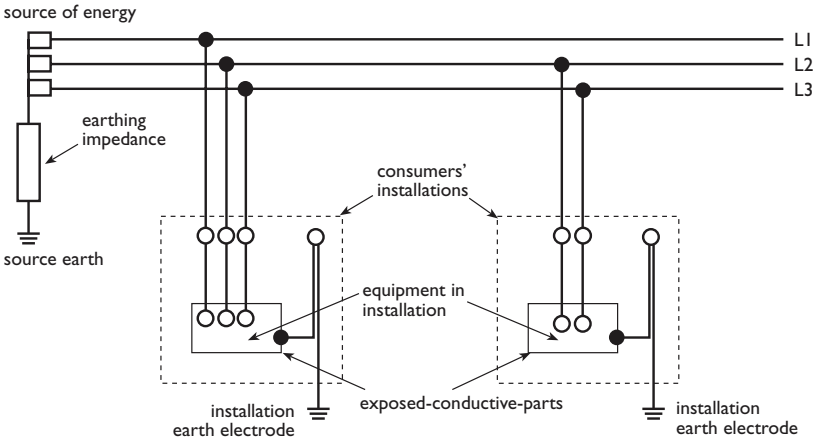

Unlike the previous systems, the IT system is not permitted, except under special license, for the low voltage supply in the UK. It does not rely on earthing for safety, until after the occurrence of a first-fault, as the supply side is either completely isolated from earth or is earthed through a high impedance.

FIGURE 12 –IT SYSTEM

3.3 PROTECTION AGAINST DIRECT AND INDIRECT CONTACT

(in the context of this document)

It is a fundamental requirement of BS 7671 that all persons and livestock are protected against electric shock in any electrical installation. This is subject to the installation being used with reasonable care and having regard to the purpose for which it was intended. When considering protection against electric shock, it is necessary to understand the difference between 'direct contact' and 'indirect contact', which was first introduced by the 15th Edition of the *IEE Wiring Regulations* in 1981 (See Figure 7).

Direct contact electric shock is the result of simultaneous contact by persons or livestock with a normally live part and earth potential. As a result the victim will experience nearly full mains voltage across those parts of the body which are between the points of contact.

Indirect contact electric shock results from contact with an exposed conductive part made live by a fault condition and simultaneous contact with earth potential. This is usually at a lower voltage.

Protection against **direct contact electric shock** (now defined as Basic Protection in BS 7671) is based on normal common sense measures such as insulation of live parts, use of barriers or enclosures, protection by obstacles or protection by placing live parts out of reach. As a result, under normal conditions it is not possible to touch the live parts of the installation or equipment inadvertently.

Protection against **indirect contact electric shock** (now defined as Fault Protection in BS 7671) is slightly more complicated hence a number of options are given in BS 7671 for the installation designer to consider. The majority of these require specialist knowledge or supervision to be applied effectively. The most practical method for general use is a combination of protective earthing, protective equipotential bonding and automatic disconnection of supply. This method which provides very effective protection when properly applied, requires consideration of three separate measures by the circuit designer:

- Protective Earthing
- Protective equipotential bonding
- Automatic disconnection in the event of a fault

Protective Earthing requires all exposed-conductive-parts (generally metallic) of the installation to be connected to the installation main earth terminal by means of circuit protective conductors (cpcs).

The main earth terminal has to be effectively connected to Earth. Typical examples of exposed-conductive-parts include:

- Conduits and trunking
- Equipment enclosures
- Class I luminaires
- The casings and framework of current using equipment

Protective equipotential bonding minimises the risk of electric shock by connecting extraneous-conductive-parts (generally metalwork that is in contact with Earth) within the location, to the main earth terminal of the installation. This means that under fault conditions the voltage that is present on the metal casings of electrical equipment is substantially the same as that present on all extraneous-conductive-parts. Theoretically, a person or animal coming into simultaneous contact with the faulty equipment and other earthed metalwork will not experience an electric shock because of the equipotential cage formed by the bonding. In practice, however, a small 'touch' voltage will be present due to differing circuit impedances.

Automatic disconnection of supply is most important for effective shock protection against indirect contact. It involves ensuring that the faulty circuit is disconnected within a specified safe time following a fault to earth. What constitutes a safe time depends on many factors and those who require detailed information on this should consult the definitive documents, IEC TS 60479 series and BS 7671:2018+A2:2022 Regulation 411.3.2.

When using an overcurrent protective device e.g. a fuse or circuit-breaker, for automatic disconnection, in order to meet the requirements of BS 7671, it is necessary to ensure that these devices can operate within a specified time in the event of an earth fault. This is achieved by making sure that the earth fault loop impedance is low enough to allow sufficient fault current to flow. It is possible to calculate the appropriate values using the published time/current curves of the relevant device. Alternatively BS 7671 publishes maximum values of earth fault loop impedance (Z_S) for different types and ratings of overcurrent device. Reference should be made to the time/current curves published in BS 7671 or by the manufacturers of protective devices.

3.4 RCDS AND INDIRECT CONTACT SHOCK PROTECTION

Indirect contact protection by fuses or circuit-breakers is dependent on circuit earth fault loop impedances being within the parameters laid down by BS 7671. Where these values cannot be achieved or where there is some doubt about their stability, then an alternative method is required. It is in this situation that the RCD offers the most practical solution because it has the ability to operate on circuits having much higher values of earth fault loop impedance.

The basis of RCD protection in this situation is to ensure that any voltage, exceeding 50 V that arises due to earth fault currents, is immediately disconnected. This is achieved by choosing an appropriate residual current rating and calculating the maximum earth loop impedance that would allow a fault voltage of 50 V. This is calculated by using a simple formula given in BS 7671:2018+A2:2022 Regulation 411.5.3.

$$R_A \times I_{\Delta n} \leq 50\ V$$

Where R_A is the sum of the resistances of the earth electrode and the protective conductor connecting it to the exposed conductive part (in ohms)

$I_{\Delta n}$ is the rated residual operating current of the RCD (amps)
Note: Where R_A *is not known it may be replaced by* Z_S.

Maximum values of Z_S for the basic standard ratings of RCDs are given in Table 1, unless the manufacturer declares alternative values.

Rated residual operating current (mA)	Maximum earth fault loop impedance Z_S (ohms) for U_0 of 230 V
30	1667*
100	500*
300	167
500	100

TABLE 1 – MAXIMUM EARTH FAULT LOOP IMPEDANCE (Z_S) TO ENSURE RCD OPERATION IN ACCORDANCE WITH REGULATION 411.5.3 FOR NON DELAYED RCDs TO BS EN 61008-1 AND BS EN 61009-1

Note 1: Figures for Zs result from the application of Regulation 411.5.3(i) and 411.5.3(ii).

Note 2: *The resistance of the installation earth electrode should be as low as practicable. A value exceeding 200 ohms may not be stable. Refer to Regulation 542.2.4.

The use of a suitably rated RCD for indirect contact shock protection will permit much higher values of Z_S than could be expected by using overcurrent protective devices. In practice, however, values above 200 ohms will require further consideration. This is particularly important in installations relying on local earth electrodes (TT systems) where the relatively high values of Z_S make the use of an RCD absolutely essential.

3.5 RCDS AND DIRECT CONTACT SHOCK PROTECTION

The use of RCDs with rated residual operating current of 30 mA or less are recognised as additional protection against direct contact shock. BS 7671:2018+A2:2022 Regulation 415.1.1 refers.

Direct contact shock is the result of persons or livestock inadvertently making contact with normally live parts with one part of the body and, at the same time, making contact with earth potential with another part of the body. Under these circumstances, the resulting electric shock will be at full mains potential and the actual current flowing to earth will be of the order 230 mA because of the relatively high body impedance involved. It has already been shown in Section 2.3 that currents as low as 40/50 mA can result in electrocution under certain circumstances. A 30 mA RCD will disconnect an earth fault current before the levels at which fibrillation occurs are reached.

The nominal rating of 30 mA has thus become the internationally accepted norm for RCDs intended to provide additional protection against the risk of electrocution.

However, the rated operating current is not the only consideration; the speed of tripping is also very important. If ventricular fibrillation is to be avoided.

Examples of types of fault condition where the RCD can be of particular benefit are listed in Chapter 5.

One example is situations where basic insulation has failed either through deterioration or, more commonly, through damage. An example of this is when a nail is driven through a partition wall and penetrates a cable. This will cause a first-fault condition due to failure of the basic insulation. The result of this is that there is now a strong possibility that the nail will become live by contacting the live conductor. Any subsequent contact by a person presents a risk of electrocution or injury by direct contact. An RCD will provide additional protection and significantly reduce the risk of injury or death because it will trip when a dangerous level of current flows to earth through the person in contact with the nail.

This type of RCD protection is identical to the more common situation where a flexible cable is damaged (for example by a lawn mower) and exposes live conductors. Here again the RCD provides protection of anybody who comes into contact with the exposed live conductors.

The extra protection provided by RCDs is now fully appreciated and this is recognised in in BS 7671:2018+A2:2022 Regulation 415.1.

It must be stressed, however, that the RCD should be used as additional protection only and not considered as a substitute for the basic means of direct contact shock protection (insulation, enclosure etc).

3.6 RCDS IN REDUCED AND EXTRA-LOW VOLTAGE APPLICATIONS

In normal use, dangerous touch voltages should not occur on electrical equipment intended for use with, and supplied from, an extra-low (not exceeding 50 V AC) or reduced voltage (not exceeding 63.5 V to earth in three-phase systems or 55 V to earth in single-phase systems) source. Such circuits are known as:

Separated extra-low voltage (SELV), in which the circuit is electrically separated from earth and from other systems.

Protective extra-low voltage (PELV), as SELV except that the circuit is not electrically separated from earth.

Functional extra-low voltage (FELV), an extra-low voltage system in which not all of the protective measures of SELV or PELV have been applied.

Reduced low-voltage system a voltage system in which all exposed-conductive-parts are connected to earth and protection against indirect contact shock is provided by automatic disconnection by overcurrent protective device or RCD.

SELV, PELV and reduced low voltage system arrangements involve electrical separation of the final circuit normally by means of a safety-isolating transformer. In normal use, the transformer prevents the appearance of any dangerous touch voltages on either the electrical equipment or in the circuit. Although extremely rare, a fault occurring within the safety isolating transformer may result in a dangerous touch voltage, up to the supply voltage, appearing within the circuit or on the electrical equipment. Where additional protection against this risk is required, or in the case of a reduced low voltage system, an RCD with a rated residual current of 30 mA or less, can be installed in the primary circuit to achieve a 5 s disconnection time.

In PELV, FELV and reduced low voltage systems an RCD can, if required, be connected into the secondary circuit of the transformer. This will provide additional protection against electric shock under all conditions:

- Shock protection if there is a failure of the transformer and mains voltage appears on the secondary side
- Protection against indirect contact from the low voltage secondary voltage
- Additional protection against direct contact from the low voltage secondary voltage

It must be remembered that, since a FELV circuit is not isolated from the mains supply or earth, it presents the greatest risk from electric shock of all of the ELV methods.

An RCD can also provide this additional protection in a SELV circuit and its electrical equipment but in this case a double-fault condition, which need not normally be considered, would have to occur before the RCD could operate.

Manufacturer's guidance should always be sought when applying RCDs in extra-low and reduced voltage applications, to confirm that devices will operate at these voltages. This is particularly important with respect to the test button since its correct operation depends on the supply voltage.

3.7 RCDS IN ELECTRIC VEHICLE CHARGING

Particular care must be taken in the selection of the type of RCD to be used in electric vehicle charging installations.

BS7671 does not permit the use of RCD Type AC for this application.

Where RCDs are used, BS7671 requires:

- RCD Type B; or
- RCD Type A and appropriate equipment that provides disconnection of the supply in case of DC fault current above 6 mA

NOTE 1: An example of appropriate equipment for detection of DC fault current above installed

4
FIRE PROTECTION

4.1 BACKGROUND

Electrical fires continue to be a significant issue in UK installations. Electricity is major cause of accidental fires in UK homes with over 17,000 electrical fires each year. Fire statistics for 2017/18 identify that almost 23 % of domestic electrical fires are caused by faulty appliances and leads.

The 2017/18 fire statistics also attribute 12 % of fires to electrical distribution (wiring, cabling, plugs). These statistics demonstrate that electrical fires occur and can cause injuries, deaths and damage or destroy significant amounts of property. Electrical fires can be a silent killer occurring in areas of the home that are hidden from view and early detection.

Source: Department for Communities and Local Government, Fire Statistics 2017/18.

Household electricity supplies are fitted with fuses or circuit-breakers to protect against the effects of 'overcurrents' ('overloads' in circuits which are electrically sound and 'short-circuit faults' due to contact between live conductors in a fault situation.) RCDs provide additional protection against the effects of earth leakage faults which could present a fire risk.

4.2 PROTECTIVE MEASURES AS A FUNCTION OF EXTERNAL INFLUENCES

It is widely accepted that RCDs can reduce the likelihood of fires associated with earth faults in electrical systems, equipment and components by limiting the magnitude and duration of current flow.

The ability to provide additional protection against the risk of fire is recognised in BS 7671, for example:

- For protection against the risk of fire, the RCD is required to disconnect all live conductors i.e. line and neutral.
- Regulation 422 defines the precautions to be taken in 'Installations where Particular Risks of Danger of Fire Exist'. Regulation 422.3.9 requires, in TN and TT systems, that wiring systems, with the exception of mineral insulated cable and busbar trunking systems, are protected against insulation faults to earth by an RCD having a rated tripping current not exceeding 300 mA.
- Section 705 defines the particular requirements that apply to 'Agricultural and Horticultural Premises'. Regulation 705.422.7 requires, for the protection against fire, an RCD having a rated tripping current not exceeding 300 mA.

Research commissioned by the Department of Trade and Industry in 1997, established that a common source of earth faults is surface tracking on insulation. The report confirms that currents as low as 50-100 mA have been found to be sufficient to cause ignition and fire as a result of tracking and that at these currents, an RCD rated to provide protection against electric shock, would also have prevented ignition. Attention is drawn also to the fact that minimising the presence of electrically conducting dust or liquids, which may arise due to leakage or spillage, can reduce the onset of surface tracking.

Again, in BS 7671, Chapter 42 sets requirements to prevent the wiring systems and electrical equipment being exposed to the harmful build-up of materials such as dust or fibre likely to present a fire hazard.

ELECTRICITY IS MAJOR CAUSE OF ACCIDENTAL FIRES IN UK HOMES – OVER 20,000 ELECTRICAL FIRES EACH YEAR.

5
INSTALLATION RISKS

5.1 BACKGROUND

It is clear that increased use of correctly selected RCDs, in addition to good wiring practice, can reduce the effects of electric shock and the possibility of fire risk significantly. RCD protection also provides an additional level of protection where the wiring complies with BS 7671 but the integrity of the wiring system has been damaged.

5.2 TYPICAL RISKS

Mechanical damage to cables
The risk of people cutting through live cables is well known. Examples include the following:

Penetration of cable insulation in walls and beneath floorboards. This is a common occurrence during DIY work in the home. The main danger arises when someone comes into contact with live cables either directly or indirectly, resulting in an electric shock.

Cutting the supply lead or an extension lead with an electric lawn mower or hedge trimmer. This is another common occurrence and can result in either a serious electric shock or death when bodily contact is made with the exposed live conductor.

Trapped or poorly maintained extension leads. The effects here are similar to those described above.

Vermin. It is surprisingly common for mice and other vermin to chew through cables, exposing the live conductors.

In all the above situations, even if bodily contact does not occur, damage to the cable insulation can result in a fire risk which is significantly higher if RCD protection is not used.

Locations containing a bath or shower
These locations present a much higher risk because a wet body presents a much easier path for an electric current to flow to earth. Consequently BS 7671 prohibits the use of electrical equipment, other than shavers connected through an appropriate shaver supply unit, within 3 m of the bath or shower basin. Nevertheless, tragedies have occurred as a result of people using extension cables to supply portable electrical appliances in these locations.

Fire risk associated with fixed electrical appliances
Faulty electrical appliances increase the risk of fire. For example, fire can occur when the insulation on an electric motor breaks down due to deterioration or external damage.

This can result in the ignition of any flammable material, including dust, in the vicinity of the non-insulated 'live' parts.

Bad wiring practice
Although all new and/or modified installations must comply with the current edition of BS 7671 it is possible that a person may incorrectly erect or subsequently incorrectly modify an installation.

Examples of the risks of electric shock and fire resulting from incorrectly wired systems include the following:

- Inadequate earthing or bonding
- Wires trapped during installation
- Insulation damaged during or after installation
- Bad system design

RCDs are not a substitute for good wiring practice. However, correctly installed RCDs will continue to provide a high degree of protection against the risks of electrocution and fire even when an installation deteriorates due to poor maintenance or lack of compliance with BS 7671.

FAULTY ELECTRICAL APPLIANCES INCREASE THE RISK OF FIRE.

6
RCD SELECTION

This Chapter is designed to help the specifier, installer and end user to decide on the appropriate residual current protection.

Where it is intended to protect the whole or part of the fixed electrical installation by an RCD, expert advice should be sought.

Portable residual current devices (PRCDs) are available for use by the non-specialist where normal socket-outlets are not protected by RCDs. They may be high sensitivity RCD adaptors, which plug into the socket-outlet, or extension units which include a plug, a high sensitivity RCD and one or more socket-outlets.

A PRCD is not part of the fixed electrical installation and only protects the equipment that is supplied through it.

It should be noted that BS 7671:2018+ A2:2022 Regulation 411.3.3 requires additional protection by means of an RCD.

In practice there may be specific protection issues which are not covered in this handbook. For additional guidance regarding the suitability of a particular RCD for specific applications it is recommended that readers consult any of the BEAMA RCD manufacturers listed at the beginning of this publication.

6.1 RCD SELECTION CRITERIA

6.1.1 Sensitivity

For every RCD there is normally a choice of residual current sensitivity (tripping current). This defines the level of protection afforded. Protection is divided into two broad categories:

Personal protection (additional protection of persons or livestock against direct contact) This is ensured when the minimum operating current of the RCD is no greater than 30 mA and the RCD operates to disconnect the circuit, within the specified time, in the event of an earth leakage.

Installation protection This is associated with devices that are used to protect against the risk of fire caused by an electrical fault. RCDs which operate at residual current levels up to and including 300 mA provide this type of protection.

The term RCDs covers a range of products some of which are listed below:,

- RCCB (Residual Current Operated Circuit-Breaker without Integral Overcurrent Protection)
- RCBO (Residual Current Operated Circuit-Breaker with Integral Overcurrent Protection)
- SRCD (Socket-Outlet incorporating a Residual Current Device)
- FCURCD (Fused Connection Unit incorporating a Residual Current Device) PRCD (Portable Residual Current Device)
- CBR (Circuit-Breaker incorporating Residual Current Protection)
- IC-CPD (In-cable control and protective device for mode 2 charging of electric road vehicles)
- MRCD (Modular Residual Current Device)

6.1.2 Residual Current Devices (RCDs)

Table 2 aims to identify RCD use together with the benefits provided. However, before looking at Table 2 there are two other classifications of RCD that need to be considered – general and time-delayed operation each having Type AC, A, F or B characteristics.

6.1.3 General and Time-Delayed RCDs

RCCBs to BS EN (IEC) 61008: Specification for residual current operated circuit-breakers without integral overcurrent protection for household and similar uses (RCCBs) and RCBOs to BS EN (IEC) 61009: Specification for residual current operated circuit-breakers with integral overcurrent protection for household and similar uses (RCBOs) may be defined by the time they take to operate as follows.

WHERE IT IS INTENDED TO PROTECT THE WHOLE OR PART OF THE FIXED ELECTRICAL INSTALLATION BY AN RCD, EXPERT ADVICE SHOULD BE SOUGHT.

General RCDs operate 'instantaneously', i.e. they do not have an intentional delay in operation and thus cannot be guaranteed to 'discriminate'. This means that where there are two or more general RCDs installed in series in an installation; more than one device may trip in the event of an earth leakage current. This would result in healthy circuits being disconnected even though the initial fault occurred in a different part of the installation. Selectivity is essential in installations where it is important to ensure that a complete system is not 'shut down', for example in domestic installations to ensure that lighting and other circuits are not disconnected if an earth leakage occurs in a power circuit.

Time Delayed RCDs provide selectivity in circuits where RCDs are connected in series. It is essential to install devices which incorporate a time delay upstream of the general device, so that the device nearest a fault will trip. RCDs with built in time delays should not be used to provide personal protection.

For RCCBs complying with BS EN (IEC) 61008 and RCBOs complying with BS EN (IEC) 61009 the time delay feature is indicated by the letter 'S'.

Selectivity is achieved between RCDs when:

- the upstream RCD is of selective type (type S or time-delayed type with appropriate time delay setting), and
- the ratio of the rated residual operating current of the upstream RCD to that of the downstream RCD is at least 3:1.

In the case of RCDs with adjustable rated residual operating current and time delay, reference shall be made to manufacturer's instructions for selectivity.

It is not possible to achieve selectivity with two S type RCDs in series.

6.1.4 Types AC, A, F and B RCDs.

Residual current devices may also be classified as Type AC., Type A, Type F and Type B as follows:

RCD Type AC: RCD tripping on alternating sinusoidal residual current, suddenly applied or smoothly increasing.

Symbol marked on RCD:

RCD Type A: RCD tripping on alternating sinusoidal residual current and on residual pulsating direct current, suddenly applied or smoothly increasing.

Symbol marked on RCD:

NOTE 1: For RCD Type A tripping is achieved for residual pulsating direct currents superimposed on a smooth direct current up to 6 mA. This requirement verifies that a smooth direct current of up to 6 mA will not desensitise the RCD.

RCD Type F: RCD for which tripping is achieved as for Type A and in addition: for composite residual currents, whether suddenly applied or slowly rising intended for circuit supplied between phase and neutral or phase and earthed middle conductor; for residual pulsating direct currents superimposed on smooth direct current.

Symbol marked on RCD:

or

NOTE 2: For RCD Type F tripping is achieved for residual pulsating direct currents superimposed on a smooth direct current up to 10 mA. This requirement verifies that a smooth direct current of up to 10 mA will not desensitise the RCD.

RCD Type B: RCD for which tripping is achieved as for Type F and in addition:

- for residual sinusoidal alternating currents up to 1 kHz;
- for residual alternating currents superimposed on a smooth direct current;
- for residual pulsating direct currents superimposed on a smooth direct current;
- for residual pulsating rectified direct current which results from two or more phases;
- for residual smooth direct currents whether suddenly applied or slowly increased independent of polarity.

Symbol marked on RCD:

or

NOTE 3: For RCD Type B, tripping is achieved for residual pulsating direct currents superimposed on a smooth direct current up to 10 mA or $4I_{\triangle n}$, whichever is the greater.

Care should be taken to avoid confusing Type B RCD characteristics with type B circuit breaker instantaneous tripping, particularly when considering RCBOs.

Product standards for RCDs for use in DC supply sytems are currently under development.

BS 7671:2018+A2:2022 regulation 531.3.3 states 'Different Types of RCDs exist, depending on their behaviour in presence of DC components and frequencies. The appropriate RCD shall be selected.

TYPE AC, TYPE A, TYPE F AND TYPE B RCDS ARE NOT SUITABLE FOR USE IN DC SUPPLY SYSTEMS.

In all cases equipment / appliance manufacturers instructions must be considered when selecting the Type of RCD.

RCD	Examples of type of equipment / load
Type AC	Resistive, Capacitive, Inductive loads generally without any electronic components, typically: • Immersion heater • Oven/Hob with resistive heating elements • Electric shower • Tungsten & halogen lighting NOTE: BS 7671:2018+A2:2022 Regulation 531.3.3 states that RCD Type AC shall only be used to serve fixed equipment, where it is known that the load current contains no DC components.
Type A	Single phase with electronic components, typically: • USB socket outlets (unless specifically advised by the USB socket outlet manufacturer that Type AC RCDs are suitable). • Single phase invertors • Class 1 IT and Multimedia equipment • Power supplies for Class 2 equipment • Appliances such as a washing machine that is not frequency controlled e.g. d.c. or universal motor • Lighting controls such as a dimmer switch and home and building electronic systems LED drivers • Induction hobs • Electric Vehicle charging where any smooth DC fault current is less than 6 mA **Type A is also suitable for Type AC applications.**
Type F	Frequency controlled equipment / appliances, typically: • Some washing machines, dishwashers and driers e.g. containing synchronous motors* • Some air conditioning controllers using variable frequency speed drives **Type F is also suitable for Type AC and Type A applications.**
Type B	• Heat Pumps (air and ground source) with inverter driven compressors • Electric Vehicle charging • Photo voltaic Three phase electronic equipment typically: • Inverters for speed control • UPS Power Electronic Converter Systems (PECS) typically: • industrial machines • cranes **Type B is also suitable for Type AC, Type A and Type F applications.** Care should be taken to avoid confusing Type B RCD characteristics with type B circuit breaker instantaneous tripping, particularly when considering RCBOs.
Type B+	Type B+ RCDs are not recognised in BS 7671 and do not have an international or harmonised (BS EN) standard. Care should be taken to avoid confusing Type B+ RCD characteristics with type B circuit breaker instantaneous tripping, particularly when considering RCBOs.

Power electronic converter PEC
device or part thereof for the purpose of electronic power conversion, including signalling, measurement, control circuitries and other parts, if essential for the power conversion function

Power electronic converter system PECS
one or more power electronic converters intended to work together with other equipment. For PECS, if a Type B RCD is required, the product will be marked with the symbol ⚠. The instructions shall include a caution notice highlighting that where an RCD is used for protection against electrical shock, only an RCD of Type B is allowed on the supply side of this product.

* Manufacturer's instructions should be taken into account.

TABLE 2 – APPLICATION EXAMPLES OF TYPES AC, A, B AND F RCDs

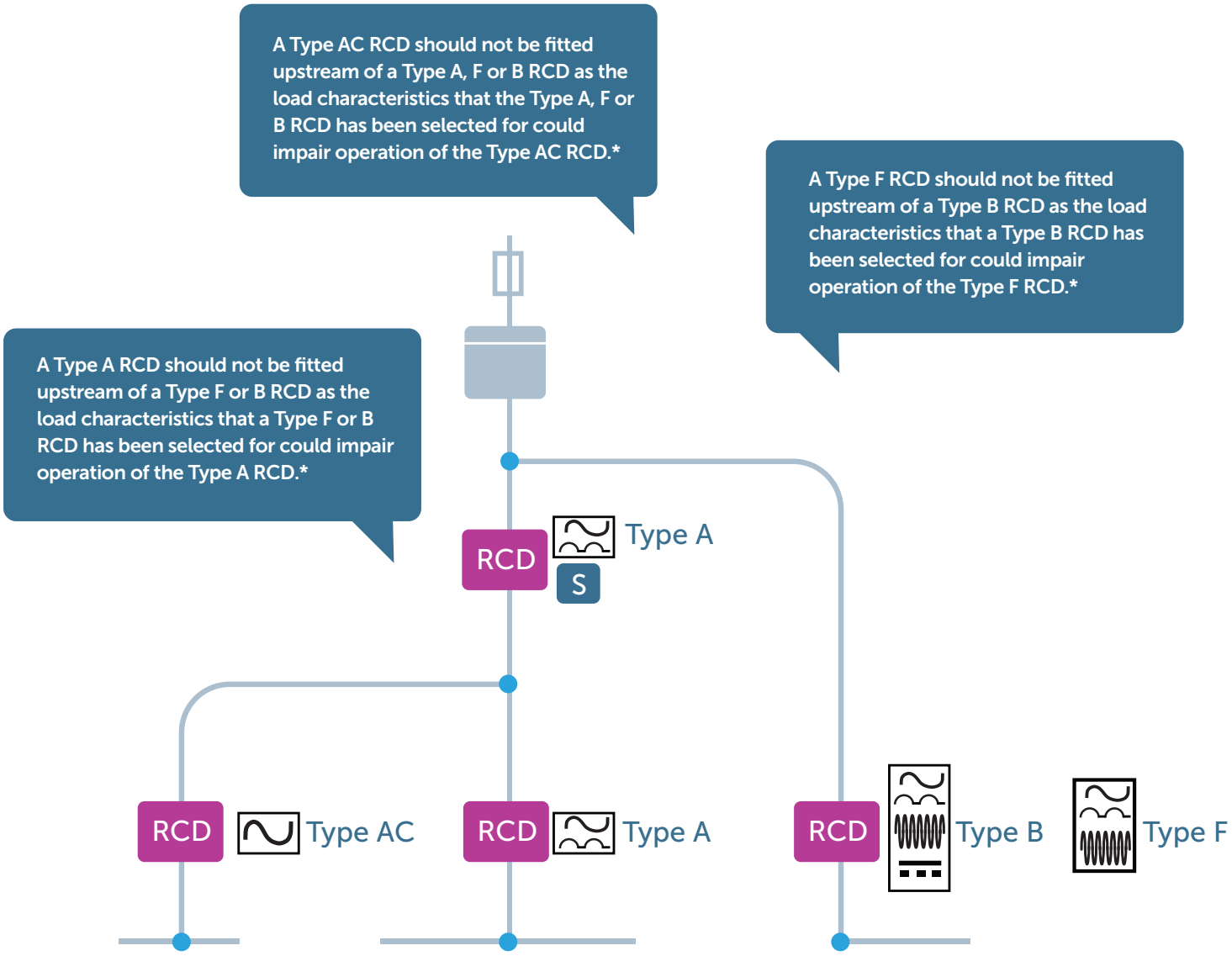

FIGURE 13 – EXAMPLE INSTALLATION ARRANGEMENT

* ***Note:*** *Type AC, A or F RCDs may, when specifically declared as a suitable arrangement by the RCD manufacturer, be fitted upstream of a Type B RCD. Impaired operation is commonly termed as 'RCD blinding'.*

DEVICE TYPE	RCCB						RCBO						SRCD		FCURCD		PRCD		CBR	MRCD
Earth Leakage Sensitivity mA (2)	10	30	100	300	100 Time Delay	300 Time Delay	10	30	100	300	100 Time Delay	300 Time Delay	10	30	10	30	10	30	10 up to many amps	30 up to many amps
Suitable for Domestic Applications	Y	Y	Y	Y	Y	Y	Y	Y	Y	Y	Y	Y	Y	Y	Y	Y	Y	Y	N	N
Suitable for Industrial & Commercial Applications	Y	Y	Y	Y	Y	Y	Y	Y	Y	Y	Y	Y	Y	Y	Y	Y	Y	Y	Y	Y
Suitable as a Main Incoming Device (CU)	N	Y	Y	Y	Y	Y	N	Y (6)	Y (6)	Y (6)	Y (6)	Y (6)	N	N	N	N	N	N	N	N
Suitable as an Outgoing Device in a CU, DB, PB or SB (5,7)	Y (1)	Y (1)	Y (1)	Y (1)	Y (1)	Y (1)	Y	Y	Y	Y	Y	Y	N	N	N	N	N	N	Y	Y(1)
Part of the Incomer on a CU, DB, PB or SB (5,7)	N	Y	Y	Y	Y	Y	N	Y	Y	Y	Y	Y	N	N	N	N	N	N	Y	Y
Provides Additional Protection	Y	Y	N	N	N	N	Y	Y	N	N	N	N	Y	Y	Y	Y	Y	Y	Y(3)	Y(3)
Provides Protection Against Electrical Fire(8)	Y	Y	Y	Y	Y	Y	Y	Y	Y	Y	Y	Y	Y	Y	Y	Y	Y	Y	Y	Y
Protection to Socket Outlets 20A or less	Y	Y	N	N	N	N	Y	Y	N	N	N	N	Y	Y	Y	Y	N	N	N	N
Fixed Wiring Protection	Y	Y	Y	Y	Y	Y	Y	Y	Y	Y	Y	Y	N	N	N	N	N	N	Y	N
Portable Appliance Rated 20A or Less	Y	Y	N	N	N	N	Y	Y	N	N	N	N	Y	Y	Y	Y	Y	Y	N	N
Can be used to Discriminate with Instantaneous Downstream Device	N	N	N	N	Y	Y	N	N	N	N	Y	Y	N	N	N	N	N	N	Y(4)	Y(4)

TABLE 3 – RCDs FOR DIFFERENT APPLICATIONS

Notes:

(1) Only if used in conjunction with suitable overcurrent protection (e.g. Fuse/circuit-breaker).
(2) 10 mA RCDs are associated with highly sensitive equipment and high risk areas such as school laboratories and in hospital areas.
(3) Yes provided 30 mA or less, but not normally used.
(4) With time delay.
(5) CU – Consumer unit to BS EN 61439-3.
(6) Must provide double pole isolation
(7) DB – Distribution Board; PB – Panel Board; SB – Switch Board
(8) For agricultural and horticultural premises, the RCD is required to disconnect all live conductors

RCDs and parallel connected supplies

This includes generating systems such as wind, photovoltaic (PV) and battery storage systems. The following connection arrangements shall not be used:

a) An RCCB that is marked line or load or by arrows indicating the direction of power flow, with the parallel supply connected on the LOAD side of the RCCB.

b) An RCBO used to connect a parallel connected supply cable to the distribution busbar, its direction of power flow (line & load marking) NOT observed i.e., connected to the LOAD side of the RCBO.

c) A Single pole RCBO used to connect a parallel connected supply cable to the distribution board and is providing additional protection e.g., for a cable concealed in a wall at insufficient depth.

6.2 RCD SELECTION GUIDES

The following selection guides are intended to help the specifier or installer decide on the most appropriate solution to common installation arrangements.

6.2.1 Commercial/industrial system RCD protection options (figure 14)

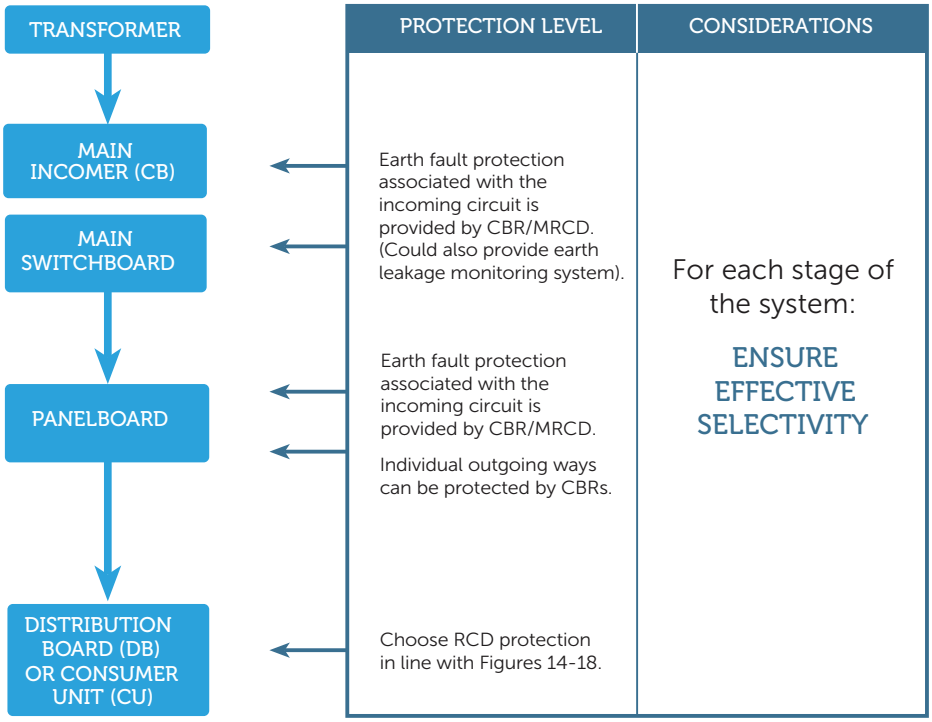

FIGURE 14 –COMMERCIAL/INDUSTRIAL SYSTEM RCD PROTECTION OPTIONS

6.2.2 Sub distribution and final circuit RCD protection options (figures 15– 19)

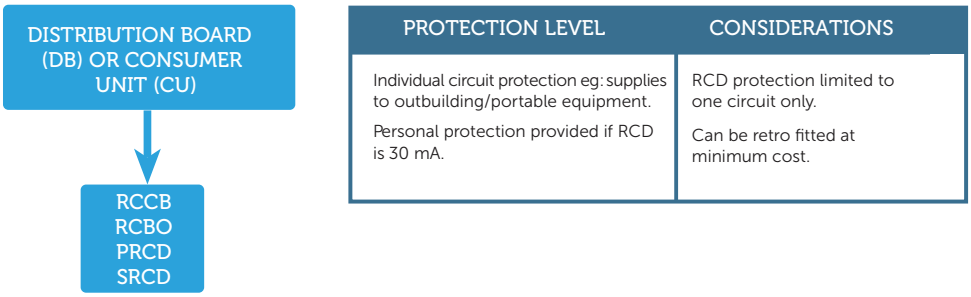

FIGURE 15 – OUTGOING CIRCUIT RCD PROTECTION, SEPARATE FROM THE DISTRIBUTION BOARD

SPLIT LOAD CONSUMER UNIT (CU) OR DISTRIBUTION BOARD (DB) WITH MAIN INCOMING SWITCH – DISCONNECTOR AND RCCB(S), TO PROTECT A SPECIFIC GROUP(S) OF CIRCUITS	PROTECTION LEVEL	CONSIDERATIONS
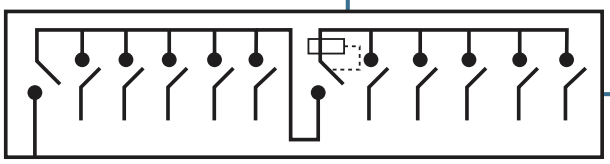	Commonly used to provide RCD protection to a group(s) of circuits e.g. Socket-Outlets supplying portable equipment. Personal protection provided if RCD is 30 mA.	Fault on one of the RCD protected circuits will trip out the supply to all associated RCD protected circuits. Installation partially RCD protected.

FIGURE 16 – SPLIT LOAD PROTECTION (A)

SPLIT LOAD CONSUMER UNIT (CU) OR DISTRIBUTION BOARD (DB) WITH MAIN INCOMING RCD AND SECONDARY RCCB(S), TO PROTECT A SPECIFIC GROUP(S) OF CIRCUITS DB - RCCB/CBR CU - RCCB	PROTECTION LEVEL	CONSIDERATIONS
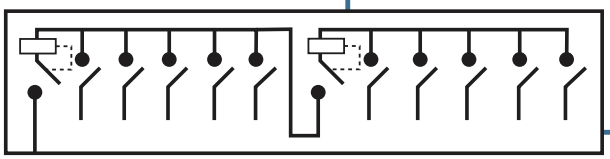	Main incoming RCD will provide protection to complete installation. (Typically 100 mA Time Delayed). Intermediate RCCB(s) commonly used to provide RCD protection to a group(s) of circuits e.g. Socket-Outlets supplying portable equipment. Personal protection provided if RCD is 30 mA.	Installation is fully RCD protected. Main incoming RCD can be selected to provide fire protection for the complete installation. Intermediate RCCB can be selected to provide additional protection on high risk circuits. Fault on one of the RCD protected circuits will trip out supply to all associated RCD protected circuits. BS 7671:2018+A2:2022 Regulation 531.3.2 (i) refers. Correct selection of devices for the main incoming RCD and intermediate RCCBs will provide selectivity between devices.

FIGURE 17 – SPLIT LOAD PROTECTION (B)

SPLIT LOAD CONSUMER UNIT (CU) OR DISTRIBUTION BOARD (DB) WITH MAIN INCOMING SWITCH DISCONNECTOR AND RCCB(S), TO PROTECT A NUMBER OF SPECIFIC GROUPS(S) OF CIRCUITS	PROTECTION LEVEL	CONSIDERATIONS
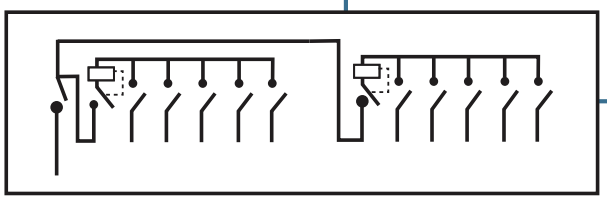	Main incoming Switch Disconnector to isolate all circuits. 30m A RCDs will provide protection to groups of circuits. Personal protection and fire protection is provided to all circuits.	Installation is fully RCD protected. Fire protection and additional protection provided for the complete installation. BS 7671:2018+A2:2022 Regulation 531.3.2 (i) refers. A fault on one circuit will cause the upstream RCD to operate disconnecting the supply to all circuits associated with that RCD. Only a section of the installation is affected.

FIGURE 18 – DUAL SPLIT LOAD PROTECTION (C)

DISTRIBUTION BOARD (DB) OR CONSUMER UNIT (CU) WITH INCOMING MAIN SWITCH - DISCONNECTOR AND INDIVIDUAL RCBO OR CBR PROTECTION ON OUTGOING CIRCUITS	PROTECTION LEVEL	CONSIDERATIONS
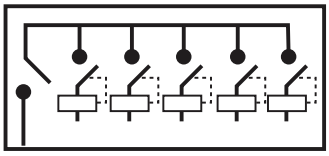	Outgoing circuits with individually RCBO or CBR protection will operate without affecting other circuits. Personal protection provided if RCBOs are ≤ 30 mA.	Installation is fully RCBO protected. Fire protection and additional protection provided for the complete installation. BS 7671:2018+A2:2018 Regulation 531.3.2 (ii) refers. Rarely, unwanted tripping of a number of RCBOs with a functional earth (FE) in the same installation and / or distribution board can occur from an internal or external earth fault. To avoid this situation, the RCBO manufacturer will need to confirm that the RCBO FE will not cause unwanted tripping with an Earth potential rise or alternatively, an RCBO without an FE could be used.

FIGURE 19 – THE MOST COMPREHENSIVE OPTION – INDIVIDUAL OUTGOING PROTECTION ON ALL WAYS

7 OPERATION AND MAINTENANCE

7.1 TESTING BY THE END USER

All RCDs should be tested at least once every six months to ensure that they are still operative. This can be carried out by the end user. It involves operating the test device (normally a push button) marked 'T' or 'Test'. This should cause the RCD to trip, disconnecting the supply to the protected circuit. Reinstate the supply by reclosing the device or pressing the 'Reset' button as appropriate.

If the RCD does not switch off the supply when the test button is pressed, the user should seek expert advice.

7.2 TESTING BY THE INSTALLER

7.2.1 Time/current performance test

BS 7671 requires a test independent of the RCD test button facility to be applied to ensure that the RCD satisfies the disconnection times required for fault and additional protection as detailed in Chapter 41.

Regardless of RCD Type (AC, A, F or B), BS7671:2018+A2:2022 only requires one test for the operation of an RCD. Operation is confirmed with an AC current at IΔn, with an operating time of < 300 ms for a non-delay RCD and for a delay 'S' type RCD, with an operating time of 130 ms – 500 ms.

For BS 7288 RCDs earlier than 2016 and BS 4293 RCDs, the operation of an RCD is confirmed by testing with an AC current at IΔn, with an operating time of 200 ms.

Installation testing of any operating parameters other than an AC current at IΔn within the operating times prescribed is not required.

Care must be taken when installation testing RCDs, correct selection of the test instrument settings is essential – when performing the above AC current tests on any type of RCD (AC, A, F or B) then ensure that 'Type AC' is selected on the test instrument.

In most cases, selection of Type A (or F/B) on the test instrument will not perform the AC current tests required by BS 7671.

7.2.2 Functional test

Upon completion of the installation an operational check of the RCD should be undertaken by pressing the RCD test button as described in 7.1 above. If the RCD fails to trip, investigate in accordance with the 'Trouble shooting' chart (Figure 20).

7.2.3 Insulation tests

When insulation tests are carried out on an installation, the applied voltage should not exceed 500 V DC (RCDs are designed to withstand this voltage).

An RCD in circuit may affect insulation resistance test results. It may be necessary to disconnect RCDs for the purpose of these tests.

BS 7671:2018+A2:2022 Regulation 643.3.3 requires a 250 V DC insulation test between live conductors and the protective conductor connected to the earthing arrangement. Some RCDs may influence the results of this test and manufacturers may recommend disconnecting the RCD for this test.

Always consult manufacturer's instructions prior to testing.

7.2.4 Earth loop impedance testing

Some earth loop impedance testers are designed to inject an a.c. test current through line and earth conductors of up to 25 A. This current will trip all RCDs. To avoid tripping the device during the test some instruments have the facility to test with a 15 mA test current. Others use a DC current to desensitise the RCD for the duration of the test however this type of tester only works on RCDs that are sensitive to AC faults alone and does not prevent many types of RCBOs from tripping. Type A, Type F and Type B RCDs (designed to the product standards BS EN (IEC) 61008, BS EN (IEC) 61009 and BS EN (IEC) 62423) will trip upon detection of the DC desensitising current.

Earth loop impedance figures for installations which contain RCDs sensitive to both AC and DC fault currents (i.e. Type A, Type F and Type B devices), should be determined either by calculation or by using a tester having a test current below the device trip threshold. Alternatively, test methods can be used which will not trip the RCD. One such method is to measure the earth fault loop impedance on the supply side of the RCD and add this to the value of the combined resistance (R1+R2) on the load side of the RCD. This method also checks the continuity of the protective conductor.

7.3 TROUBLESHOOTING

7.3.1 Troubleshooting for the end user

In the event of a trip occurring on an RCD it is most likely to be caused by a fault in a piece of equipment supplied by a socket-outlet. The flow chart below gives a simple guide to actions to be taken to identify the source of the fault. If in doubt, consult a qualified electrician.

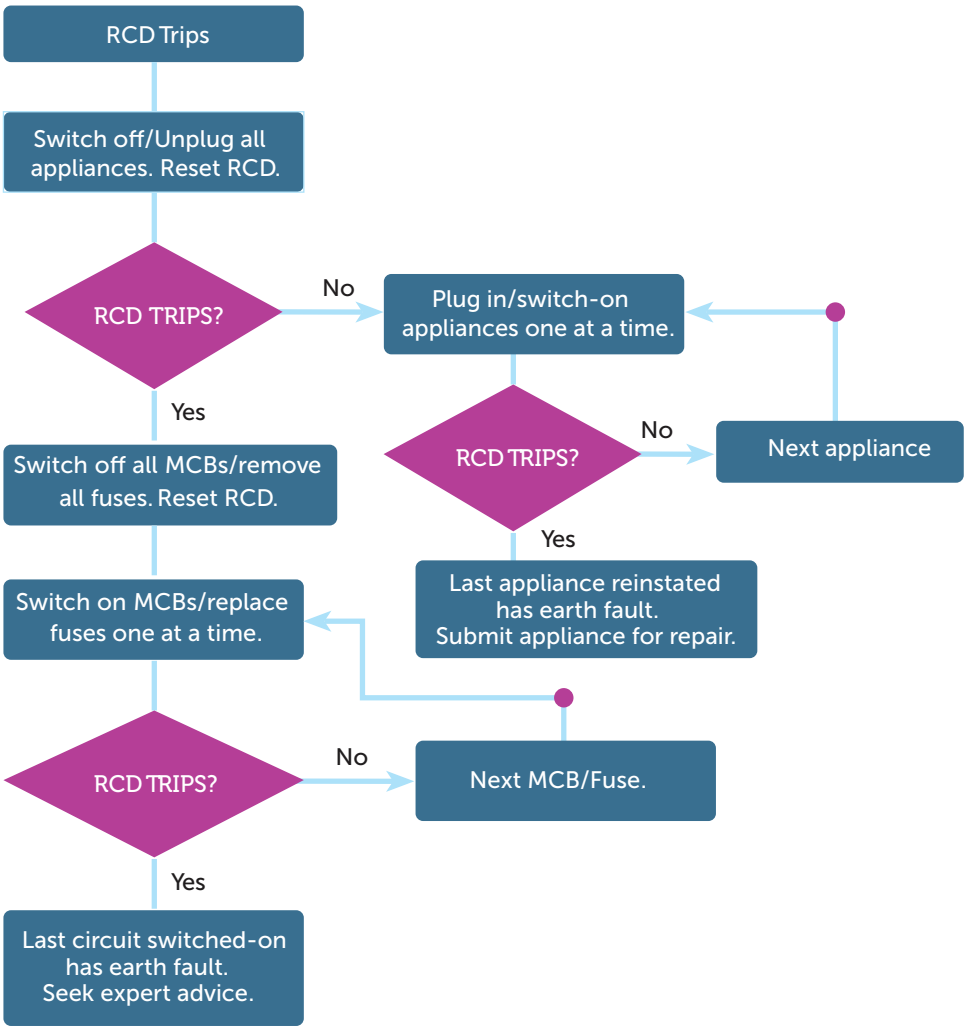

FIGURE 20 – TROUBLE SHOOTING FOR THE END USER

7.3.2 Troubleshooting for the electrical contractor/instructed person

Potential causes of unwanted tripping:
Supply side (upstream of the RCD)

- Mains borne disturbance
- Site machinery/plant
- Lightning strike
- Equipment or faults external to the installation e.g. cable joints breaking down causing sporadic unwanted tripping to one or more premises, a fault in an adjacent installation

Load side (protected 'downstream' side of the RCD)

- Wrongly specified RCD
- Wet plaster / condensation
- No 'selectivity between RCDs
- Crossed neutral on split load board
- N – E fault
- High standing earth leakage currents caused by:
  - Surge Protection Devices (SPDs)
  - Too many items of current using equipment containing filter circuits
  - Excessive length of mineral insulated cables
  - Heating elements (e.g. cookers)
- Householder / DIY faults (e.g. nails/picture hooks)
- Moisture ingress (appliances, sockets etc.)

For assistance in faultfinding, a step-by-step trouble shooting flow chart is given below.

7.3.3 Electromagnetic Compatibility (EMC)

RCD product standards have been developing over the past three decades, early versions of the product standards did not include specific EMC testing of RCDs. To meet the requirements of the EMC directive, RCDs were tested to more general EMC requirements.

Specific EMC requirements for RCDs are detailed in BS EN 61543 which was first published in 1996, compliance with BS EN 61543 was mandatory from April 2001.

Products designed and manufactured prior to April 2001 may not comply with the specific EMC requirements of BS EN 61543, such products may be affected by wireless communications (e.g. smart meters), resulting in unwanted tripping. A solution to resolving the unwanted tripping is to replace the RCD according to the RCD and consumer unit manufacturer's guidance, where permitted.

7.4 DETAILED FAULT-FINDING IN RCD PROTECTED INSTALLATIONS

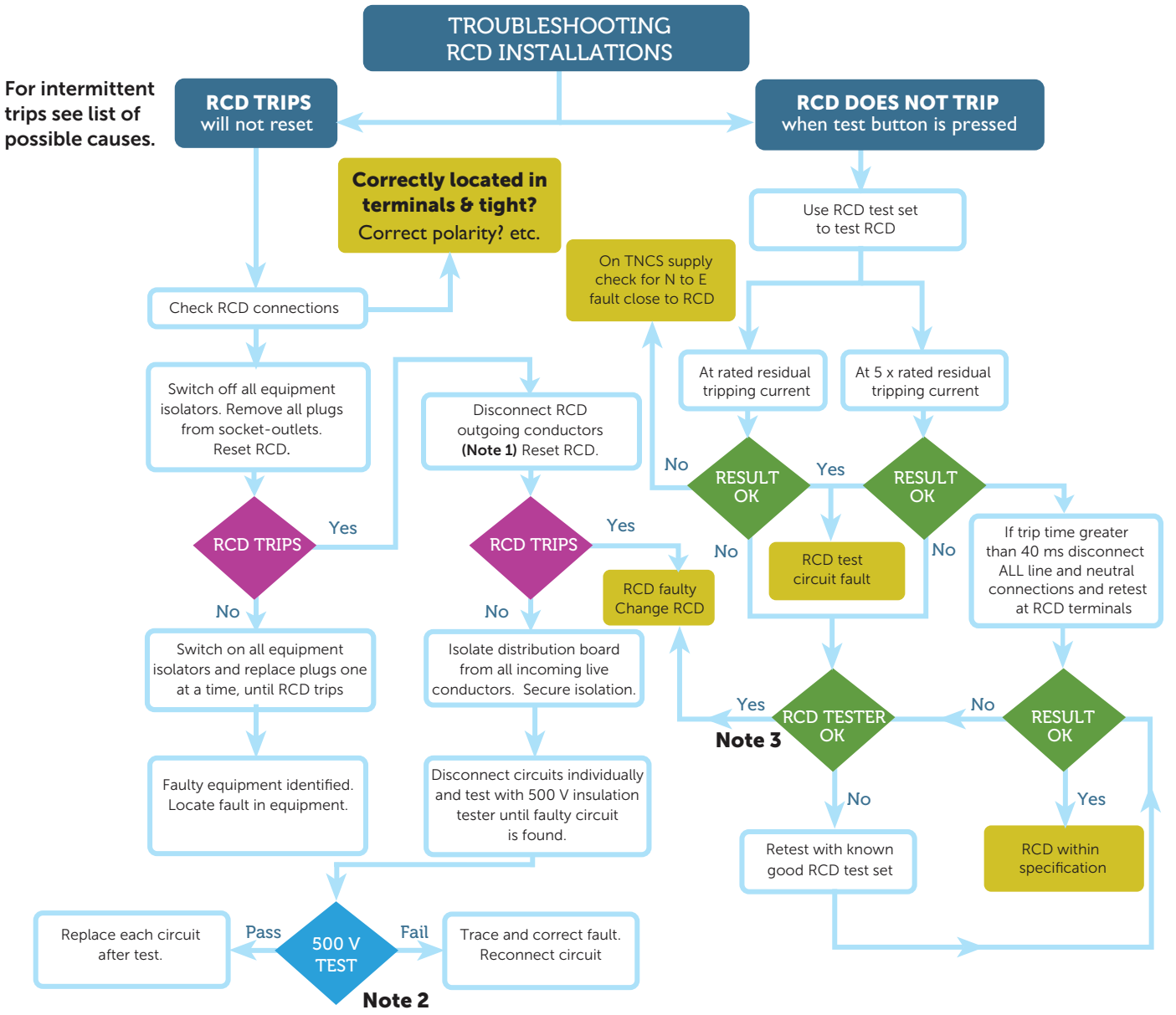

Note 1 N from neutral bar.
L switch off all CB's or remove fuses.

Note 2 Minimum insulation resistance 2 MΩ.

Note 3 Some test sets are influenced by voltage and certain loads.

FIGURE 21 – TROUBLE SHOOTING FOR THE ELECTRICAL CONTRACTOR/INSTRUCTED PERSON

8 RCD CONSTRUCTION

8.1 VOLTAGE INDEPENDENT RCD

Voltage independent RCDs use the energy of the earth fault current to trip the mechanism directly. In this type of RCD the output from the sensing coil operates a specially constructed magnetic relay and so releases the RCD mechanism, independently of the mains voltage.

Voltage independent RCDs normally use a polarised (field weakening) relay construction. This operates by cancellation of the permanent magnetic flux (which holds the relay ON) by the excitation flux (produced by the fault current). This can only occur in one half-cycle of the AC supply because the magnetic flux will be reinforced in the other half cycle. Operating times can vary from 20 to 120 ms at rated tripping current.

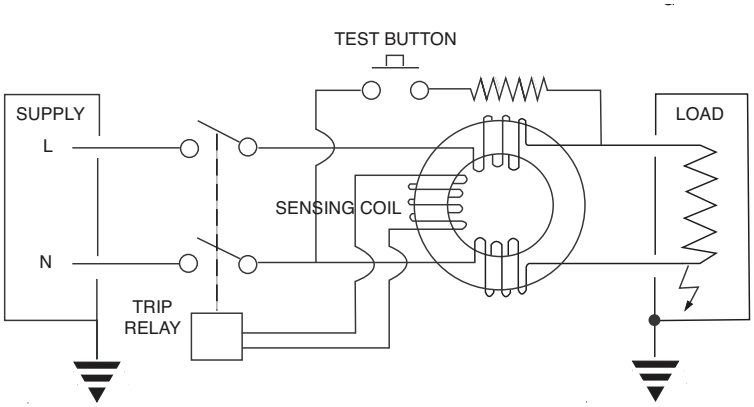

FIGURE 22 – VOLTAGE INDEPENDENT RCD DESIGN

8.2 VOLTAGE DEPENDENT RCD

Voltage dependent RCDs generally employ an electronic amplifier to provide an enhanced signal from the sensing coil to operate a trip solenoid or relay (Figure 23). RCDs of this type are defined as 'voltage dependent ' because they rely on a voltage source, derived from the main supply, or an auxiliary supply, to provide power to the amplifier. The basic principle of operation is, however, the same as voltage independent RCDs.

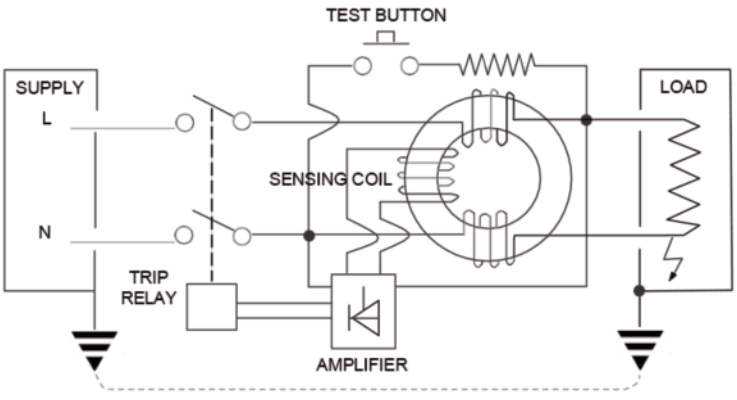

FIGURE 23 – VOLTAGE DEPENDENT RCD DESIGN

9
DETAILED FAULT-FINDING ON RCD PROTECTED INSTALLATIONS BY COMPETENT PERSONS

An RCD will detect and trip not only on a line to earth fault and may also trip automatically on a neutral to earth fault depending on the design. The majority of earth faults occur in appliances, particularly portable appliances and their flexible cables. This means that in many installations, faults can be located easily by unplugging all appliances and then plugging them in again. The RCD will trip when the faulty appliance is reconnected.

Faults on the fixed wiring are often caused by nails or screws driven between the neutral and earth conductors, reversed neutral and earth connections or a neutral conductor touching an earthed mounting box. Withdrawing a fuse or tripping a circuit-breaker in a final circuit does not normally interrupt the neutral and may not prevent an RCD from tripping. Such a condition could occur whilst altering the circuit wiring. Cutting through a cable could cause the RCD to trip but this may not be noticed at the time and during fault finding, the trip may not be associated with the cable being cut.

The most effective way of testing for earth faults in the wiring or equipment is by measuring the insulation resistance between line and neutral conductors and earth using a 500 V d.c. insulation resistance tester.

Before commencing insulation resistance testing it is essential to ensure that the distribution board or consumer unit is completely isolated from the supply voltage and all Overcurrent Protection Devices (OCPDs) are isolated.

Safe isolation procedures must be adopted and where necessary the means of isolation should be secured.

It is important to ensure that there are no time-switches, contactors etc. isolating any part of individual circuits from the test equipment whilst the tests are carried out. Care should also be taken to ensure that equipment will not be damaged by the tests.

It is also important to disconnect or isolate current using equipment wherever possible. Very often it is not practical to isolate lighting equipment, in which case to avoid the equipment being damaged by the test voltage, lighting circuit's line and neutral conductors should be connected together for the duration of the test. For other circuits line earth faults are relatively easy to find since the line conductors can be isolated by withdrawing the fuse or by switching off the circuit-breakers. Each circuit should then be tested separately and the faulty circuit can then be identified.

In the case of neutral to earth faults, neutral conductors should be disconnected from the neutral bar one at a time and tested individually. The faulty circuit will then be readily identified without necessarily disconnecting all neutral conductors. Where RCBOs are installed load cables should be disconnected from the device.

It might be assumed that any standing protective conductor current below the trip level of the RCD could be ignored. Unfortunately, this is not so because the RCD sensitivity is effectively increased to the difference between the RCD trip current and the standing protective conductor current. For example, an RCD with a rated residual operating current of 30 mA will have a typical trip current of 22 mA; if the standing protective conductor current is 10 mA it will only take an earth fault current of 12 mA to trip the RCD. This could lead to unwanted tripping.

It is often possible to obtain a measurement of standing protective conductor current in final and distribution circuits using a milliamp clamp meter, the circuit live conductors being encircled by the jaws of the instrument. With this test the instrument sees the same current as the RCD.

A high impedance neutral to earth fault may not pass sufficient fault current to trip the RCD. From a safety point of view a neutral to earth fault with little or no current flow through it does not present a danger. However, when any protected load is switched on, some of the load current will travel through the neutral to earth fault; when the load current is large enough the RCD will trip. Because the fault is load-dependent, tripping can appear to be random. Switching on a large load connected to another sub-circuit that is healthy may still trip the RCD. This is because part of the load current may flow to earth through the neutral block and the neutral to earth fault. The symptoms of a partial neutral to earth fault are very similar to unwanted tripping and are discussed in more detail later.

9.1 MAINS BORNE TRANSIENTS AND SURGES

Although the overall reliability of RCDs is excellent, in a number of cases conditions can occur within an installation that can cause an RCD to trip when no apparent fault condition can be found. This type of unwanted tripping is often incorrectly referred to as 'spurious' or 'nuisance' tripping and can be a source of considerable frustration for a contractor who attempts to trace this elusive fault. However, once the reasons for unwanted tripping are understood, and it is realised that it is attributable to the installation conditions and not the RCD, then a methodical course of action will overcome the problem with a minimum of effort.

Two main causes of unwanted tripping can be identified:

- Transient surge currents between phases or between phase and neutral within the installation
- A combination of supply network transient overvoltages, and capacitance to earth within the installation

9.1.1. Tripping due to surge currents

In theory, tripping due to surge currents between phases or between phase and neutral should not occur but in practice any magnetic device such as an RCD will have leakage flux. If the load current is large enough, this leakage flux will induce sufficient secondary current to trip the RCD. For example, BS EN (IEC) 61008-1 Clause 9.18 requires that an RCCB should not trip when one second surges of six times rated current flow. BS EN (IEC) 61009-1 requires that RCBOs do not trip when subjected to 0.5 µs/100 kHz ring wave with a current surge of 200 A. Experience in the field has shown that tripping due to surge currents is not the major cause of unwanted tripping.

9.1.2. Tripping due to transient overvoltage and capacitance to earth

A transient overvoltage can be defined as a temporary surge, of limited energy, caused by a sudden change in power requirements. Sources of transient overvoltage include reactors of any type, e.g. motors, transformers, contactors, power factor correction capacitors etc. They are also caused by arcing at switch, contactor, relay and circuit-breaker contacts.

It is known that lightning strikes can be a source of unwanted RCD tripping. K.M. Ward ('Lightning Damped', *Electron,* 23 January 1979) stated: "the initial surge on an 11 kV line, due to a strike, may be of the order of 240 kV at the point of impact and will reach a point two miles from the point of origin in 3 µs by which time it will have fallen exponentially to some 140 kV."

Some of these transient overvoltages could be expected to be transformed down and would appear on the 230 V mains. Hence, unwanted tripping can occur some considerable distance (i.e. several kilometres) away from the point of impact of a lightning strike. Ward also states that secondary distribution systems may carry transient overvoltages of up to 3.3 kV.

The blowing of a simple rewireable fuse can also cause transients. One of the pioneers of fuse technology, H.W. Baxter (*Electric Fuses*, 1950) stated: "It is noteworthy that, given sufficient inductance, the peak voltage with a 10 inch (copper) fuse wire reached 6000 V (approximately 29 times the circuit voltage)."

It has been reported that overvoltages of 6000 V can be reached with BS 1363 plug fuses used in inductive circuits. It would not be unreasonable (based on Baxter's research) to get a peak voltage of 2 kV from a two inch copper fuse wire subjected to a prospective fault current of 1.2 kA, or a peak voltage of 1.1 kV from a two inch copper wire subjected to a prospective fault current of only 400 A.

Although significant transients can arise within an installation they would only occur under fault conditions. They might, however, travel to other installations where they could cause unwanted tripping of an RCD.

Discharge lighting can be a major source of transient overvoltages. Discharge lighting is distinct from other equipment in that high voltage pulses are produced deliberately to initiate the discharge. Because of the inductive nature, and hence lagging power factor of the control circuits of discharge lamps, a capacitor is frequently used for power factor correction. This is connected directly across the supply terminals of each lamp. The characteristics of discharge lamps and their control gear also produce considerable third harmonic current (approximately 20 % of phase current). This is not reduced by the power factor correction capacitor. As a result, the percentage of third harmonic current is greater in a high power factor circuit than a low power factor circuit.

When a discharge lamp is switched on, a surge of many times rated current (i.e. several hundred amps) may occur for several microseconds due to the charging of the power factor correction capacitor. Alternatively, if no power factor correction capacitor is included, the opening of the supply switch will cause voltage surges of several kV. Either situation can cause unwanted RCD tripping.

Some types of discharge lighting (e.g. high-pressure sodium lamps and metal halide lamps) use external igniters, which produce a series of high voltage pulses, which cease when the lamp starts. These pulses are of short duration but range from 3 kV to 4.5 kV for high-pressure sodium lamps. Metal halide lamps are ignited by applying 9 kV pulses at 10 ms intervals for up to 7 seconds directly on to the lamp. The very large number of discharge lamps in use (particularly for street lighting) makes it likely that this is a major source of transient overvoltages.

From the foregoing it will be seen that unwanted tripping may be caused by transient overvoltages in the mains supply, originating from outside the installation.

The question of how these transient overvoltages trip an RCD has not yet been discussed. Transients can appear in three possible forms:

- Between phase and neutral and of opposite polarity with respect to earth
- Between phase and neutral but of the same polarity with respect to earth
- Either on phase only or on neutral only with respect to earth

Tests on installations, with transient surge suppression connected across phase and neutral, have shown no reduction in the amount of unwanted tripping.

For a transient overvoltage to trip an RCD, it must cause a current imbalance by either:

- Causing a flashover to earth due to breakdown of insulation or
- Allowing sufficient high-frequency earth leakage due to the capacitance to earth.

If the former were happening, then a flashover from a low-energy transient would be followed (at least in some cases) by a mains flashover. No installations investigated so far have shown this type of damage.

The capacitance to earth required to cause a current flow of 50 mA can be calculated. Assuming an isolated pulse with a 50 µs rise time and a peak voltage of 1 kV, say:

$$X_c = \frac{1000}{0.05} = 20000\ \Omega$$

$$Frequency = \frac{1}{4 \times 50 \times 10^{-6}} \approx 5000\ Hz$$

$$C = \frac{1}{2\pi \times 5000 \times 20000} = 1.6\ nF$$

In practice, an isolated transient does not occur. There will be several hundred such pulses and they may well have peak voltages greater than 1 kV. The cumulative effect of their fast rise times, coupled with their fast repetition frequency, could produce sufficient earth fault current to trip an RCD if sufficient capacitance to earth exists.

9.2 CAPACITANCE TO EARTH

The capacitance of 1.0, 1.5, and 2.5 mm² flat thermoplastic insulated twin and earth cable is approximately 150 pF per metre. It would not be unusual for a domestic installation to have 100 m of 2.5 mm² cable and 250 m of 1.0 or 1.5 mm² cable, which would result in a capacitance to earth of up to 52.5 nF. This would allow a standing protective conductor current of 11 µA/m or a cable leakage current of nearly 4 mA for the whole installation (at 230 V, 50 Hz).

The capacitance to earth of 2.5 mm² mineral insulated (MI) cable is higher, approximately 400 pF/m. This would allow a standing earth leakage of 30 µA/m. A commercial or industrial installation could contain 500 m of cable, which could result in a capacitance to earth of up to 200 nF. This would allow a standing protective conductor current of nearly 15 mA while providing a very low impedance path for any transient overvoltages.

The advantages of mineral insulated (MI) cable over plastic insulated types are in no way disputed, but the higher capacitance of MI cable can present the contractor with additional earth fault problems. These should be taken into account during the early design stage when MI cable and RCD protection are to be used together.

Another major source of capacitance to earth is radio frequency interference (RFI) suppression components. It is common practice to connect capacitors between live and neutral, live *and* earth and neutral and earth. These capacitors are usually supplied on a single 'delta-connected' unit to the BS EN 60939 series of standards. The BS EN 60939 series has no prescriptive requirements concerning maximum values of capacitance but covers safety and testing requirements in great detail. The capacitors in these filters should be Class Y (i.e. a capacitor suitable for use on 230 V mains systems where failure of the capacitor could lead to risk of an electric shock (see BS EN 60939-2).

RFI suppression units, particularly those allowed in non-household appliances, could cause significant standing protective conductor currents and will provide a path for currents resulting from transient overvoltages.

The large value of neutral to earth capacitance, allowed in permanently earthed equipment, would not normally cause a problem. It would become significant if transient overvoltages occurred between neutral and earth. Also, double pole switching would cause an RCD to trip since up to full mains voltage could suddenly appear across this capacitance during switch off. (See Section 9.3).

Other British Standards which are relevant to earth leakage or RFI suppression, but which make no reference to maximum allowable earth leakage currents or capacitance to earth, are:

BS EN 62368-1:2014: *Audio/video, information and communication technology equipment. Safety requirements*

BS EN 55011: *Industrial, scientific and medical equipment. Radio-frequency disturbance characteristics. Limits and methods of measurement*

BS EN 55013: *Sound and television broadcast receivers and associated equipment. Radio disturbance characteristics. Limits and methods of measurement*

All this means that there are no clear guidelines limiting the amount of capacitance to earth that a manufacturer fits into his equipment. BS EN 60335-1 puts maximum limits on the 50 Hz, 230 V protective conductor current for household appliances to 5 mA for stationary Class 1 appliances with heaters (e.g. cookers), 3.5 mA for motor operated Class 1 appliances, 0.75 mA for other Class 1 appliances and 0.25 mA for Class 2 appliances. BS EN 60598 place limits on the maximum protective conductor currents allowed in luminaires. BS EN 60335-2-90 covers the safety aspects of microwave ovens and specify a maximum protective conductor current of 1 mA.

The Electricity Safety, Quality and Continuity (Amendment)

Regulations 2009 (ESQCR) came into force on 6th April 2009. Effective from 31st January 2003 the *Electricity Safety, Quality and Continuity Regulations 2002* replaced the *Electricity Supply Regulations 1988*. There are no requirements in the ESQCR which specify any maximum allowable value of protective conductor current in an installation. Until 1988 the maximum allowable value of protective conductor current in an installation was given by the *Electricity Supply Regulations, 1937*, and was limited to one ten-thousandth part of the maximum current to be supplied to the installation. The relevant Clause (Clause 26) was referred to in Regulation 13-9 of the 15th Edition of

the *IEE Wiring Regulations*. The 1937 Regulations were replaced by the *Electricity Supply Regulations 1988*, since when there has no longer been any limitation on protective conductor current within the regulations for the supply of electricity.

An installation is "deemed to comply" with the safety requirements of the regulations for the supply of electricity if it complies with BS 7671 Requirements for Electrical Installations IET Wiring Regulations.

BS 7671:2018+A2:2022 Regulation 531.3.2 states that RCDs shall be selected and erected such as to limit the risk of unwanted tripping. In addition to other requirements, including sub-division of circuits, it also limits accumulation of protective conductor and/or earth leakage currents to not greater than 30 % of the rated residual operating current of the RCD.

9.3 CABLES AND OVERHEAD LINES

There are indications that the problem of unwanted tripping occurs more frequently in installations supplied by overhead lines than by those supplied by underground concentric cable. An analysis of the capacitance and inductance of these two types of conductor shows that:

- The capacitance of a non-armoured cable is significantly greater than that of an equivalent overhead line.
- The inductance of an overhead line is greater than that of an equivalent non-armoured cable .

Table 5 gives typical values of inductance and capacitance for overhead lines and cables obtained from the Electrical Engineer's Reference Book. They agree with values, which can be derived from other sources;

- *The Calculation and Design of Electrical Apparatus W. Wilson.*
- The Switchgear Handbook,Vol. 2.

Another significant fact is that, in general, the characteristic impedance of a cable is very much lower than that of an overhead line. Only a small fraction of any voltage surge that travels down a line would be transmitted down an equivalent cable. For this reason equipment at the end of an overhead power line is sometimes connected to the line by a short length of surge-minimising cable. A cable is, by its very nature, a good attenuator of transient overvoltages.

The distance between the installation and the sub station will be significant since the amount of attenuation between the installation and the transient overvoltage sources (e.g. sub station transformers, street lighting, tap changers etc) will be a function of cable length. Also, an overhead line behaves as a good aerial to radio-frequency signals and noise while an underground cable, by both its nature and location, is less susceptible to this type of interference.

The foregoing analysis indicates that unwanted tripping of an RCD is less likely within installations supplied by underground steel-armoured cables, due to the large inductance and capacitance of the cable, and more likely on installations fed by overhead lines due to the low capacitance of the line. The fact that TN-C-S cables are not generally steel-armoured, suggests that unwanted tripping is more likely on TN-C-S installations than on non TN-C-S systems.

	Overhead Line	Cable
Inductance (mH/mile)	**1.8 to 2.1**	**0.8**
Capacitance (µF/mile)	**0.015**	**0.27 to 0.5**

TABLE 4 – APPROXIMATE VALUES OF INDUCTANCE AND CAPACITANCE FOUND IN PRACTICE

9.4 NEUTRAL TO EARTH FAULTS

Although neutral to earth faults do not normally fall under the heading of 'unwanted' tripping, they can result in intermittent effects within an installation that appear illogical and very similar to unwanted tripping. This is particularly true where the neutral to earth fault impedance is significant or where the installation is part of a PME (Protective Multiple Earthing) TN-C-S system. This is aggravated by the fact that it is difficult to electrically isolate parts of the neutral wiring of an installation.

The detection of a neutral to earth fault by an RCD depends on either:

- The existence of a neutral potential above earth caused by the voltage drop along the neutral or
- The existence of a load connected into the protected circuit. Part of the load current then flows back via the earth return thus tripping the RCD. This load current will also cause a voltage drop along the neutral

In a non TN-C-S system, the existence of such a neutral potential above earth is almost inevitable due to all the consumer loads connected to that neutral. In a TN-C-S installation the neutral potential above earth can depend on that one consumer load, due to the TN-C-S link. Therefore, in a TN-C-S installation with no load, or a very light connected load, an RCD cannot detect a neutral to earth fault. This can also happen in a non-TN-C-S system where all consumers on the same neutral are taking virtually no load or in an installation that happens to be close to the sub-station. In practice these last effects are rare.

Where the neutral to earth fault impedance is significant, then the earth leakage current will be insufficient to trip the RCD. The fault may now be described as 'unwanted tripping' since the detection of this fault becomes totally load-dependent and the RCD may trip at random times. By itself this condition is not serious since, if no current is flowing, the neutral to earth fault is not a danger but as soon as a load is connected, and the earth leakage current reaches a dangerous level, the RCD will trip. The user or installer may be baffled by all these effects and will often describe the fault as spurious or nuisance tripping.

9.5 DOUBLE GROUNDING

'Double grounding' is a phenomenon which occurs when two earth faults – a phase to earth fault and a neutral to earth fault – occur simultaneously in a circuit protected by an RCD. Where these earth faults do not present large impedances, and therefore the earth fault current is limited, nothing out of the ordinary is likely to happen. However, when the earth fault impedance of both faults is significant, then a situation can occur where the phase to earth fault current can cancel the effect of the neutral to earth fault current since the two currents flow in opposite directions through the RCD. Furthermore, 'double grounding' can render the RCD test circuit inoperative due to the neutral to earth fault current cancelling the effect of the test circuit current.

'Double grounding' phenomena rarely occur in practice. They virtually never occur on non-TN-C-S systems due to the neutral to earth voltage. They have been known to occur on TN-C-S systems but only when the systems were unloaded. Problems have occurred on TN-C-S installations during the commissioning stage where it is common for no load to be connected.

9.6 CONCLUSIONS

Confusion can be caused by the combination of installation conditions that could lead to random tripping on TN-C-S installations. Often, the RCD is blamed for being "too sensitive", "unreliable" etc., when it is the installation conditions which are to blame.

Where phase to earth and neutral to earth faults occur on the same circuit, it is easier to locate the phase to earth fault first. Tripping of the circuit-breakers or removal of fuses in the sub-circuits can disconnect the live circuits easily. After elimination of the live to earth fault, the neutral to earth fault will be easier to locate.

In all cases, especially TN-C-S Systems, the effect of load current must be borne in mind. A heavy load should be applied to all sub-circuits before assuming that all earth faults have been eliminated.

Flowcharts for fault-finding on RCD protected installations, are shown in section 7.3 (Figs. 20 and 21). They include all the possible faults discussed in this section. They provide a logical approach to diagnosing an earth fault and their careful use should allow any earth fault problem to be solved. Sections 7.3 and 9.2 show that the effects due to protective conductor currents can be quite complex.

Capacitance to earth is frequently the cause of unwanted tripping and can easily reach significant levels due to the cumulative effect of cables and RFI suppression components. Limits on protective conductor currents are no longer set by the electricity supply regulations *(ESQCR Regulations 2009)* and BS 7671 does not set maximum limits for installations. Protective conductor currents and capacitance to earth limits set by British Standards are large enough to allow a build-up of protective conductor currents among appliances, luminaires and RFI suppression components to a level that may trip an RCD.

With the arrival of the EMC Directive, this lack of control has resulted in an increase in the use of the protective conductor for functional purposes since electromagnetic compatibility (EMC), and not the provision of additional protection by RCDs, is the priority of equipment manufacturers. The objectives of good RFI suppression and of earth fault protection create a conflict of interests, which have yet to be resolved.

Residual current devices from BEAMA manufacturers are designed to overcome many of these problems.

10 ANNEX

10.1 FIRE PROTECTION – EXTRACT FROM DTI REPORT

The following information is extracted from the Department of Trade and Industry Report Residual current devices; added value for home safety by kind permission. It forms the basis for the information in Section 4 and underlines the role of RCDs in fire prevention.

10.1.1 The Incidence of Fires in Household Electrical Appliances

Table 6 gives details of the average annual number of fires to which fire brigades are called and which have been identified as associated with faults in electrical appliances (Fire statistics UK).

Product safety standards seek to minimize the risk of fire ignition and to ensure that if fire ignition does occur then the fire is contained. In practice, these provisions for fire safety are supplemented by overcurrent and sometimes earth leakage protection devices in the supply installation.

For Class II appliances under normal conditions, no earth fault current path will be involved and no added protection against fire would be expected if an RCD was used.

For Class I appliances, RCDs would be expected to provide closer protection and limit the duration of current flow and energy transfer to insulation in the event of fault currents to earth and thereby reduce risk of fire ignition. In the list of appliances shown in Table 6, Class I appliances predominate.

10.1.2 Electrically Induced Fire Ignition and Propagation

Fires in electrical wiring systems and electrical equipment are usually the result of arcing or overheating associated with current carrying conductors.

When electrical conductors are subject to arcing or overheating and are adjacent to insulation the chemical processes of combustion can occur as follows:

- An initial heating of the insulation – the resulting temperature increase will be rate dependent on the amount of heat generated, the specific heat of the product mass, the thermal conductivity of the material and the latent heats of fusion and vaporisation where these procedures occur.
- Degradation and decomposition of the material.
- Flame ignition – this depends on the availability of oxygen, the flash points of the materials and their limits of flammability.

Appliance Type	Average incidence of fires attended by the fire brigades attributed to faults in appliances	Probable Construction Class	
Washing machines	1747.00	I	
Blankets, bedwarmers	640.00		II
Other	477.00		
Electric cooking appliances	445.00	I	
TV	368.00		II
Dishwashers	320.00	I	
Tumble/Spin drier	305.00	I	
Electric water heating	263.00	I	
Refrigerators	253.00	I	
Electric space heating	234.00	I	
Lighting	183.00	I	II
Central heating	76.00	I	
Other wiring	52.00		
Irons	16.00	I	
Plugs, socket switch	16.00		

TABLE 5 – AVERAGE ANNUAL NUMBER OF FIRES IN THE UK ATTENDED BY FIRE BRIGADES WHERE THE FIRES ARE ATTRIBUTED TO FAULTS IN ELECTRICAL APPLIANCES, LIGHTING OR WIRING

Product safety standards will generally require low flammability materials to be used where insulation is touching or supporting electrically live parts. However, even low flammability fire resistant plastics can support combustion if a high temperature is maintained for a sufficient length of time. Materials classified as low flammability may also support a local flame for a short time. To avoid flame spread, it is important that designs allow adequate separation between these materials and other high flammability materials which may be present. Flame propagation sometimes occurs as a result of distortion or melting of plastic parts which allows them to come into contact with, or to drop onto, a heat source.

BS 7671:2018+A2:2022, recommends the use of AFDDs conforming to BS EN (IEC) 62606 as a means of providing additional protection against fire caused by arc faults in AC final circuits. See BEAMA Guide to AFDDs.

10.1.3 RCD Protection Against Fire Induced by Surface Tracking Across Insulation

Surface tracking is a common cause of insulation failure. It arises from the growth of conducting paths at the surface. These may be due to conducting deposits from the atmosphere and the presence of moisture. When the path carries enough current, it will become thermally unstable resulting in a permanently conducting state. The action is progressive and ultimately a conducting path will bridge the insulation.

Surface tracking can occur at voltage levels well below the intrinsic breakdown strength of the dielectric. An established track between two conductors can produce local temperatures sufficient to ignite flammable vapour released from the insulation by the heating produced in the track or adjacent materials.

The rate of growth of tracks in practice is slow until a conducting path has been established. A standard test has been developed to compare the resistance to surface tracking of different materials in a short time span. The test is detailed in BS EN 60112 (See Section 10.1.6).

In the tracking test, if a current of 500 mA or more flows for at least two seconds in a conducting path between the electrodes on the surface of the specimen, or if the specimen burns, the material has failed the test.

Although the test is designed to be used only for comparative purposes, it is clear that if the final results of the test are representative of the long term effects of normal levels of pollution on the tracking resistance of materials, and the spacing between the test electrodes is representative, then an RCD with a trip current of 500 mA would provide suitable protection against fire for materials which pass the test. RCD protection would only be effective for tracking paths to earth and not for tracking paths between phase and neutral supply conductors.

10.1.4 Surface Tracking Induced by Fluid Contamination of Insulation

The tracking test is designed to simulate the long term effects of surface contamination and moisture on the tracking resistance of insulation. However, the test can also provide an insight into the effect of fluid contamination on insulation and the ability of RCDs to halt or prevent tracking.

A diagram of the tracking test configuration and operation are shown in Section 10.1.6

During a standard tracking test it can be established that the liquid conductivity in the first phase gives a current of the order 2-5 mA. In the second phase, surface discharge activity occurs at current levels of the order 2-5 mA. When discharge activity ceases, the current is of the order of 2 mA. When the liquid is present, the current flow would be sufficient to trip a 30 mA or 100 mA RCD. In the period where surface discharge activity occurs prior to a low resistance tracking path being established, an RCD would not be expected to act to completely eliminate deterioration of the surface and the formation of incipient tracks.

Further tests have been made to determine the current levels needed to cause flame ignition by tracking. A sample of a printed circuit board having a good resistance to tracking was used for these tests. Using a standard tracking test solution, a track across the insulation between adjacent conductors developed at a current of 80 mA. As the current increased to 90 mA, the track glowed red and a yellow flame ignited along the track. The flame height was approximately 8 mm. The current levels observed in these tests indicate that a 30 mA RCD would have interrupted this process before flame ignition. In a second similar experiment with a 30 mA RCD in circuit, it was not possible to develop a track between the conductors or to cause flame ignition.

Some household detergent fluids have a high conductivity compared with the standard test fluid used in the tracking test. Tests were carried out using one common fluid which has a conductivity of approximately five times that of the standard tracking test fluid. Using a liquid having a higher conductivity would be expected to accelerate the onset of tracking failure.

The current levels measured in these tests were in the range 8-84 mA. It was observed that the nature of the solution appeared to play a more dominant role in the failure process in these tests than when the standard test solution was used. During the tests, a pink coloured flame 2 mm high was observed, apparently associated with decomposition of the fluid.

It is clear from the tests carried out, that if contamination by conductive fluid bridges insulation between a supply conductor and earth, and produces a high conductivity path, then this is likely to trip an RCD having a sufficiently low trip current level. However, if the resistance of the fluid is such that heating will cause evaporation at current levels below the threshold for RCD operation, then tracks can form.

The above tests suggest that RCDs can be sensitive enough to trip due to the presence of conductive fluid contamination, spillage or spray in appliances as a result of earth current flow and may arrest the progress of tracking before flame ignition occurs. If appliances may be subject to fluid contamination of insulation, for example due to deterioration of seals in appliances or spillage, RCDs can provide protection at current levels where overcurrent protection would not be expected to operate.

10.1.5 Electrical Equipment Faults and Fire Hazard Limitation

In this section, consideration will be given to the role which RCDs and overcurrent protection devices can play in reducing the risk of fire associated with potential faults in home electrical wiring systems and components common to different types of electrical household appliances.

10.1.5.1 Wiring Installations and Equipment

The major fire risks in fixed installations are overheating of connections and sustained arcing. Modern PVC insulated wiring, if properly installed, can be expected to outlast the lifetime of the property. The wiring must be protected against short-circuit or sustained overcurrent by the use of fuses or overcurrent circuit-breakers. Also, the current rating of the circuit must not be exceeded in the event that the circuit is later extended.

In the event of overheating of connections, neither overcurrent devices nor RCDs would protect against fire ignition unless a secondary event occurred such as contact with another conductor which might produce a high overcurrent, or contact with an earthed conductor.

Surface tracking may occur in wiring installation accessories such as distribution boxes, switches and socket-outlets due to environmental pollution and moisture. Condensation is likely to occur particularly in areas such as cellars and where wiring is routed into buildings. An established track can produce a localised temperature increase sufficient to ignite flammable vapour released from the insulation as a result of heating produced in the track. Whereas an RCD should provide some protection against tracking between the phase or neutral conductors and earth, no protection would be provided against a phase to neutral track. Overcurrent devices would not provide protection against fire ignition by surface tracking.RCD protection would also operate in respect of earth leakage currents due to damaged insulation on wiring conductors in metal conduit and at entry points in metal wall boxes.

Arc Fault Detection Devices (AFDDs) are designed to detect parallel arcs (line to line, line to neutral and line to earth) and series arcs (arcing within one of the conductors). Unlike a circuit breaker which detects overloads and short circuit currents and RCDs which detect current imbalance, an AFDD utilises electronic technology to analyse the signature (waveform) of an arc to differentiate between normal arcing and arcing faults. Upon detection of an arcing fault, the AFDD disconnects the final circuit from the supply. Further details can be found in the BEAMA Guide to AFDDs.

10.1.5.2 Motors

The principal causes of fire ignition in motors are arcs or sparks igniting insulation or nearby flammable material. Such events can occur when the motor winding short-circuits or grounds or when the brushes operate improperly. Overheating can occur when the ventilation is restricted or the motor is stalled. Bearings may overheat because of improper lubrication. Sometimes excessive wear on bearings allows the rotor to rub on the stator. The individual drives of appliances of many types sometimes make it necessary to install motors in locations and under conditions which are injurious to motor insulation. Dust that can conduct electrically such as brush material may be deposited on the insulation, or deposits of textile fibres may prevent normal operation and obstruct cooling vents.

Motors may be provided with overcurrent protection to limit overheating should the motor stall or fail to start. In addition, an overtemperature cut-out may be provided. RCDs can provide additional protection in respect of fault currents to earth when basic insulation between the windings and an earthed housing becomes contaminated by dust, cracks or fails due to, for example, thermal stress, mechanical stress or ageing.

10.1.5.3 Transformers

The primary cause of fire with transformers is overheating of conductors and insulation. Fusing is provided to prevent overheating under overload fault conditions and may be supplemented by overtemperature cut-outs.

In many applications, parts of the transformer may be connected to earth and, in the event of a failure to earth, an RCD can provide protection by limiting the current flow and the consequent heating effect.

10.1.5.4 Switch and Relay Contacts

Failures of contacts may occur due to weak springs, contact arcing, spark erosion and plating wear. Failures due to contamination can also occur. Surface deposits, particularly carbon or ferrous particles, cause electrical failures and insulation breakdown. High resistance contacts often due to the deposition of non-conducting or semiconducting material at the contact surfaces will cause local overheating which may result in fire. These faults will not be detected by overcurrent or RCD protection devices.

Where contamination or tracking across insulation provides a conductive path to earth, RCDs can offer additional protection.

Vibration will accelerate mechanical deterioration of contacts and other moving components.

10.1.5.5 Internal Wiring and Connections

There are two types of faults in electrical wiring. These are open circuit faults, where a conductor has parted, and short-circuit faults where a conducting path exists between one conductor and another conductor or earth. A fault can be a combination of both an open circuit fault in a conductor and a short-circuit fault.

Open circuit faults, such as poor wiring connections due to contact ageing, are an important cause of local overheating and are unlikely to be detected by RCDs or over current protection devices. Arcing which results from conductor failure in a flexible cord, although potentially a fire hazard, will not be detected by RCDs or overcurrent protection devices unless a short-circuit fault exists at the same time due to, for example, the broken end of the conductor piercing the insulation. AFDDs provide protection against series and parallel arcing (see section 10.1.5.1)

Connections will be sensitive to factors such as load cycling, the initial integrity of the contact interface, vibration, mechanical disturbance, the effect of

environmental contamination and growth of tarnish films at the contact interface. Where connections are made to components, surface tracking may occur as a result of conductive surface deposits and moisture. Under these circumstances where the tracking is to an earthed surface, protection may be provided by an RCD.

10.1.5.6 Heating Elements

Heating elements may have an earthed sheath. RCDs will provide early warning of breakdown of insulation and will also detect pin holes in sheathing when used to heat water.

10.1.5.7 Summary

From the above considerations, it is clear that although RCDs and overcurrent devices have a role in reducing the risk of fire in electrical equipment, they will not respond to many of the failure modes likely to initiate fire ignition. Particular problems arise in detecting overheating of connections and in-line wiring faults which are a common cause of fires, however AFDDs provide protection against series and parallel arcing (see section 10.1.5.1). The role RCDs can play in providing additional protection is illustrated by Table 7.

Item	Potential Faults	RCD Added Protection	Over current Protection	Over temperature Cut-out
Motors	Surface contamination of insulation: carbon tracking.	RCD's will trip at low values of earth leakage current due to: tracking or contamination; cracks or faults in insulation caused by thermo-mechanical stress or mechanical damage; arcs or sparks when the motor winding short-circuits or grounds or when brushes operate improperly.	Will respond to overheating if the motor fails to start, provided the operating current is set close with running current.	Will respond to overheating caused by lack of ventilation or conductor overheating while running.
Transformers	Surface contamination of insulation: overheating.	Where there is a failure of insulation between the primary winding and earth, RCD protection will operate.	Fusing is usually provided to prevent overheating under fault conditions.	Over temperature cut-outs may be fitted.
Switch and Relay Contacts & Controls	The rating and performance characteristics are not suited to the duty-cycle. Tracking or contamination.	RCD's can provide protection where tracking or contamination provides a conductive path to earth.	Needed for live-neutral fault protection.	
Heating Elements	Pin holes in metal sheathing of mineral insulated elements allowing moisture to penetrate.	RCD's will provide an early indication of breakdown of insulation. Note. Certain elements may not be sealed by design and at switch on, significant levels of earth leakage current can occur due to moisture ingress.	Needed to protect against live-neutral insulation failure.	
Wiring	Open circuit faults on flexible cords. Short circuit due to insulation damage.	RCD's will detect any loose wires which contact an earthed surface. They will also detect insulation damage in metal conduct.	Required to prevent overheating in the event of a fault, insulation damage and live-neutral failure.	
Connections	Vibration loosening. Mechanical disturbance: deterioration of contact interfaces and overheating. connections not dimensioned in respect of their heating.	RCD's will detect connections loosened by for example, vibration which come free and touch earthed surfaces.	Will protect against high current live-neutral or live-earth contact if the connection becomes free.	
Wiring Accessories	May be subject to condensation in humid areas which are subject to wide temperature fluctuations. Contacts can overheat, due to vibration, poor insulation or surface oxidation.	RCD's will respond to condensation leading to liquid build up in enclosures and tracking across insulation.		
Electronic Circuits	Contamination		Local protection in the form of fusing is appropriate.	May be appropriate for some components.

TABLE 6 – POTENTIAL FAULT CONDITIONS FOR CIRCUIT PROTECTION DEVICES AND ELECTRICAL COMPONENTS

10.1.6 The Comparative Tracking Index Test (BS EN 60112)

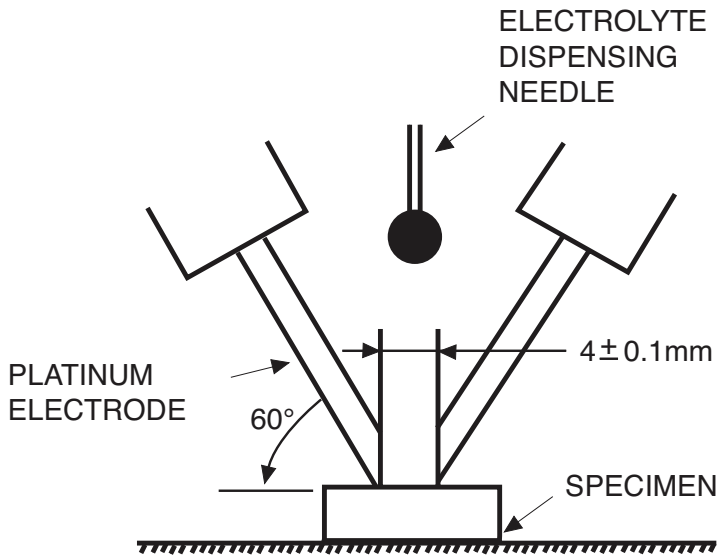

FIGURE 24

The diagram above shows the tracking test configuration. The tracking test operates as follows:

a) A standard contaminant liquid having a conductivity of 2.4 Siemens is fed as a single drop to fall between the two electrodes which are set to a test voltage,

b) The heat developed by the passage of current through the liquid evaporates the liquid and heats the specimen.

c) In the final stages of evaporation, discharges can be observed on the surface of the insulation which are known as scintillations and these create sites which develop into a tracking path. Different materials will require a different number of drops of the test solution or a different test voltage to produce tracking sufficient to form a sustained conduction path between the electrodes.

The test is continued to 50 drops of the test solution. A failure has occurred if a current of 500 mA or more flows for at least 2 s in a conducting path between the electrodes on the surface of the specimen, thus operating an overcurrent relay; or if the specimen burns without releasing the relay.

10.1.7 Practical Tests on Surface Tracking Induced by Fluid Contamination of Insulation and RCD Protection

10.1.7.1 Background

Using standard tracking test equipment the liquid conductivity in the first phase gives a current between the electrodes of the order of 100 mA. In the second phase, surface discharge activity is associated with currents of the order 2 - 5 mA. When discharge activity ceases, the current is of the order of 2 mA. Clearly, when the liquid is present the current would be sufficient to trip a 30 mA RCD. However, during the discharge period before the establishment of a low resistance tracking path, an RCD would be insensitive to the level of current needed to prevent deterioration of the surface of the insulation.

10.1.7.2 Tracking tests

Further tests at ERA have been made to assess the effects of contamination of insulation by conducting fluids and the effectiveness of RCD protection in preventing fire ignition by tracking.

Standard test solution

A 0.01 ml drop of the standard tracking test solution was applied to the insulation between two conductors on a printed circuit board (gap 3 mm) and a voltage applied between the conductors. When the voltage applied was 80 V, bubbles were seen to form at the electrode interface with the fluid. The measured current was 4.2 mA. At 10 V the liquid evaporated.

In a second test at 250 V, the phenomena observed were similar to those in a conventional tracking test rig. Scintillations were observed as the liquid evaporated and eventually a track formed which extended approximately halfway across the insulation. The current measured was 37 mA.

A second drop was applied at the same position on the insulation. Further tracks formed and the current level increased to 65 mA. On the fourth drop, the current increased to 80 mA and a track was formed between the conductors. As the current increased to 90 mA, the track glowed red and a yellow flame ignited along the length of the track. The flame height was approximately 8 mm. The current observed in this experiment allows the inference that an RCD with a trip current of 30 mA would have interrupted the process before flame ignition occurred. An RCD with a trip current of 300 or 500 mA would not have been effective.

In a second similar experiment with a 32 mA RCD in circuit, tracks were formed but it was not possible to ignite the material. Nine attempts were made. A factor in this experiment was that only a small quantity of liquid could be applied between the conductors to avoid causing the RCD to trip.

Household liquid solution

Some detergent fluids have a high conductivity compared with the standard test fluid used in the tracking test. A test was carried out using one common fluid which has a conductivity of approximately 5 times that of the standard tracking test fluid.

A drop of solution was applied to the insulation between two conductors of the printed circuit board (gap 3 mm) and a voltage applied between the tracks. When the voltage applied was 40 V, bubbles were seen to form at the electrode interface with the fluid. The current measured was 8 mA. Within a time of the order of seconds, the

bubbles spread to form a central path between the printed circuit board conductors.

In a second test at 250 V, the phenomena observed were similar to those in a conventional tracking test rig with scintillations occurring as the liquid evaporated and eventually a track between the conductors was established. The order of current observed during the test were 8-84 mA. Following complete evaporation of the liquid and the cessation of discharge activity, the resistance between the printed circuit board conductors was measured as greater than 400 MΩ. During the test, a pink coloured flame 2 mm high was observed apparently associated with decomposition of the fluid. The currents involved in this experiment suggest that RCD operation would have interrupted the process. However, the dominant cause of the high conductivity was the presence of the fluid or its effect in maintaining a continuous conductive path along the track. Examination of the specimen after the test suggested that the fluid played a dominant role in the failure process rather than the intrinsic properties of the printed circuit board insulation.

A third test was made to establish the progress of events with a 30 mA RCD in circuit. In the presence of a drop of the fluid across the insulation, the RCD tripped due to the high conductivity of the fluid. With less liquid present, scintillations occurred and the RCD did not trip. Following a second application of the liquid, tracking developed across the insulation. A period followed in which the track glowed red then the RCD tripped to halt the process.

It is clear from the tests that if contamination by conductive fluid can bridge insulation to earth and produce a low conductivity path, this is likely to trip an RCD. However, where the film resistance is such that heating will cause evaporation, tracks will form below the threshold for RCD operation. RCDs will provide no protection against tracking or fire ignition when live to neutral insulation is bridged unless there is an associated path to earth.

The above test shows that high sensitivity RCDs will trip when the presence of conductive fluid contamination spillage or spray in appliances results in earth current flow. In such cases, the RCD may arrest the progress of tracking before flame ignition of insulation occurs. Although only a limited amount of testing has been carried out in the present work, it is clear that RCDs have the potential to reduce the incidence of fire due to surface tracking.

10.2 REFERENCES

10.2.1 Documents to which reference is made in this Guide

BS 4293: Specification for residual current-operated circuit-breakers *(Superseded by BS EN 61008 series)*

BS 7671: *Requirements for Electrical Installations. IET Wiring Regulations Eighteenth Edition*

BS EN 55011: *Limits and methods of measurement of radio disturbance characteristics of industrial, scientific and medical (ISM) radio-frequency equipment*

BS EN 55013: *Sound and television broadcast receivers and associated equipment. Radio disturbance characteristics. Limits and methods of measurement*

BS EN 60065: *Audio, video and similar electronic apparatus. Safety requirements*

BS EN 60112: *Method for the determination of the proof and the comparative tracking indices of solid insulating materials*

BS EN 60335-1: *Specification for safety of household and similar electrical appliances. General requirements*

BS EN 60335-2-90: *Specification for safety of household and similar electrical appliances. Particular requirements. Commercial microwave ovens*

BS EN 60598: *Luminaires*

BS EN 60939: *Passive filter units for electromagnetic interference suppression – Part 1: Generic specification*

BS EN 60939: *Passive filter units for electromagnetic interference suppression – Part 2: Sectional specification: Passive filter units for which safety tests are appropriate – Test methods and general requirements*

BS EN 60939: *Passive filter units for electromagnetic interference suppression – Part 2-1: Blank detail specification – Passive filter units for electromagnetic interference suppression – Filters for which safety tests are required (assessment level D/DZ)*

BS EN 60939: *Passive filter units for electromagnetic interference suppression – Part 2-2: Blank detail specification – Passive filter units for electromagnetic interference suppression – Filters for which safety tests are required (safety tests only)*

BS EN (IEC) 60947: *Specification for low-voltage switchgear and controlgear*

BS EN (IEC) 61008 series: *Residual current operated circuit-breakers without integral overcurrent protection for household and similar use (RCCBs).*

BS EN (IEC) 61009 series: *Residual current operated circuit-breakers with integral overcurrent protection for household and similar uses (RCBOs).*

IEC 60479: *Effects of current on human beings and livestock*

IEC 61140: *Protection against electric shock – Common aspects for installations and equipment*

IEC 62955: *Residual direct current detecting device (RDC-DD) to be used for mode 3 charging of electric vehicles*

10.2.2 Other relevant documents not specifically mentioned in the text

IET Guidance Notes

Health and Safety Booklet HSR25: Memorandum of Guidance on the Electricity at Work Regulations 1989

10.2.3 Associated Directives and Statutory Regulations

Electricity Supply Regulations 1988. Replaced by: The Electricity Safety, Quality and Continuity (Amendment) Regulations 2009

Electricity at Work Regulations 1989

Health and Safety at Work etc. Act 1974

The Electrical Equipment (Safety) Regulations 2016 (as amended)

The Product Safety and Metrology Etc. (Amendment Etc.) (EU Exit) Regulations 2019

European Directives

The Low Voltage Directive (LVD) (2014/35/EU)

The Electromagnetic Compatibility (EMC) Directive (2014/30/EU)

10.3 TERMS AND DEFINITIONS

Circuit-breaker
A device capable of making, carrying and breaking normal load currents and also making and automatically breaking, under pre determined conditions, abnormal currents, such as short-circuit currents.

Residual Current
r.m.s. value of the vector sum of the instantaneous values of the currents flowing through the main circuit of the RCD.

RCD – Residual Current Device
Mechanical switching device or association of devices designed to make, carry and break currents under normal service conditions and to cause the opening of the contacts when the residual current attains a given value under specified conditions.

Note: See Section 1.3 for definitions of different types of residual current device.

EFR – Earth Fault Relay
A device incorporating the means of detection of an earth fault current, of comparison of its value to the earth fault current operating value and of giving a signal to an associated switching device to open the protected circuit when the earth fault current exceeds this value. Relays can be directly connected or fed from a separate toroid.

Note: Although not necessarily an RCD, this type of device is used in conjunction with other devices to provide protection of the total installation against the effects of high earth fault currents.

CU – Consumer Unit
(may also be known as a consumer control unit or electricity control unit).

A particular type of distribution board comprising a type tested coordinated assembly for the control and distribution of electrical energy, principally in domestic premises. It will normally incorporate manual means of double pole isolation on the incoming circuit and an assembly of one or more fuses, circuit-breakers, residual current operated devices, signalling and or other control devices.

DB – Distribution Board
An assembly containing switching or protective devices (e.g. fuses, circuit-breakers, residual current operated devices) associated with one or more outgoing circuits fed from one or more incoming circuits together with terminals for the neutral and protective circuit conductors. It may also include signalling and or other control devices. Means of isolation may be included in the board or may be provided separately.

PB – Panelboard
An assembly containing switching or protective devices (e.g. circuit-breakers or fusegear typically in accordance with BS EN 60947-2 and/or BS EN 60947-3) associated with one or more outgoing circuits fed from one or more incoming circuits together with terminals for the neutral and protective circuit conductors. It may also include residual current protection systems, signalling and or control devices. Means of isolation may be included in the board or may be provided separately.

Switchboard
An assembly of switchgear with or without instruments.The term however, does not apply to groups of local switches in final circuits.

Class I Equipment
Equipment which relies on connection of exposed-conductive-parts to a protective (earth) conductor in the fixed wiring of an installation, in addition to basic insulation, for protection against electric shock.

Class II Equipment
Equipment in which protection against electric shock does not rely on basic insulation only, but in which additional safety precautions such as supplementary insulation are provided in the absence of any means of connecting exposed-conductive-parts to a protective conductor.

Rotherwick House
3 Thomas More Street
London E1W 1YZ

www.beama.org.uk